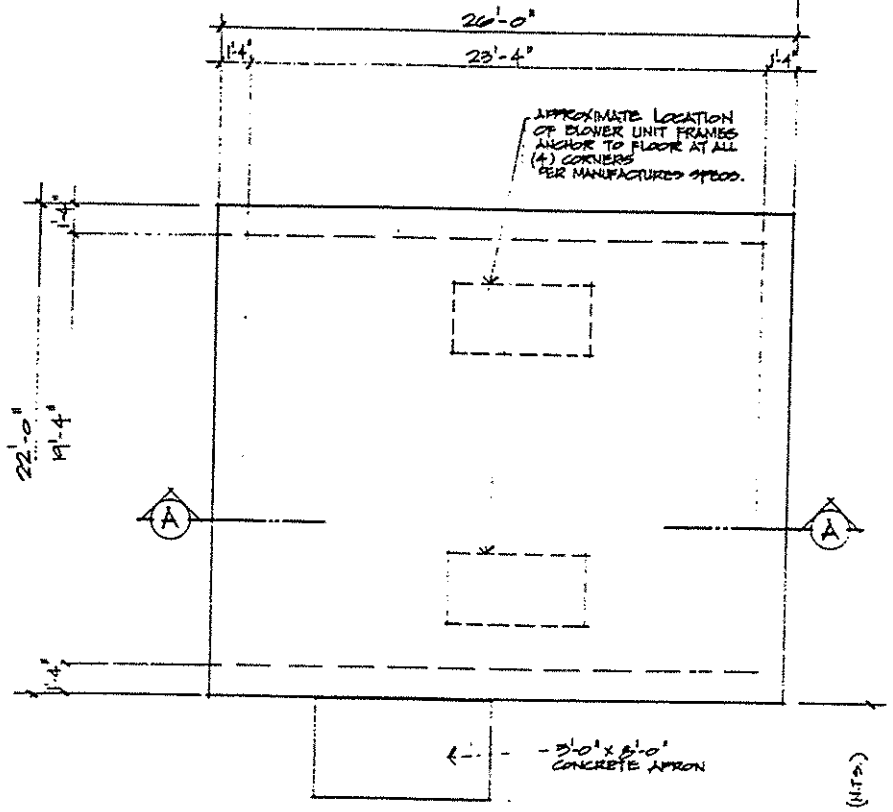

BLOWER BUILDING FOUNDATION PLAN
SC: 1/4" = 1'-0"

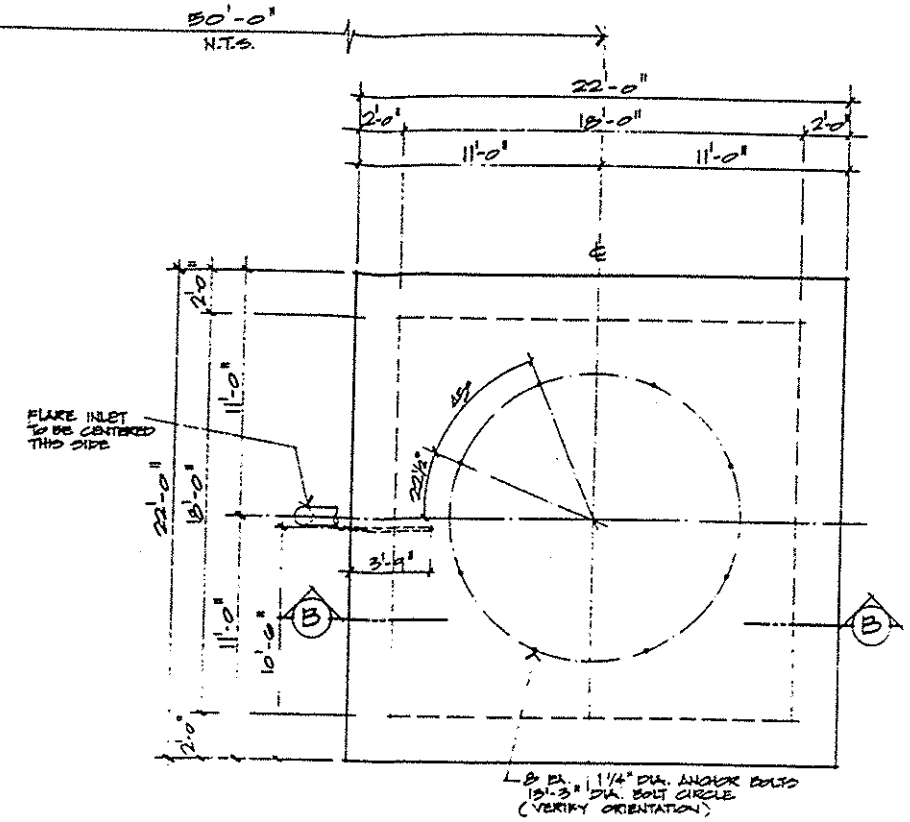

FLARE FOUNDATION PLAN
SC: 1/4" = 1'-0"

STRUCTURAL NOTES: (UNLESS OTHERWISE NOTED)

1.0 SCOPE:
THIS SPECIFICATION OUTLINES THE STRUCTURAL DESIGN SPECIFICATIONS FOR ORGANIC WASTE TECHNOLOGIES. WHEN A DIFFERENCE EXISTS BETWEEN THIS SPECIFICATION AND ANY OTHER GOVERNING CODE, THE MORE STRINGENT SHALL CONTROL. ANY OTHER ITEMS NOT COVERED THEREIN, SHALL BE COMMENSURATE WITH GOOD ENGINEERING PRACTICE.

2.0 APPLICABLE CODES AND STANDARDS:

2.1 UNIFORM BUILDING CODE: 1988 EDITION.
2.2 AISC "MANUAL OF STEEL CONSTRUCTION" - 8th. EDITION.
2.3 ACI 318-83 "BUILDING CODE REQUIREMENT FOR REINFORCED CONCRETE".
2.4 "DESIGN VALUES FOR WOOD CONSTRUCTION": BY NATIONAL FOREST PRODUCTS ASSOCIATION, JANUARY 1986.

3.0 DESIGN LOADS:

3.1 DEAD LOAD = WEIGHT OF STRUCTURE AND ALL THINGS PERMANENTLY ATTACHED.
3.2 LIVE LOADS: SNOW LOAD = 30 PSF.
FLOOR LOAD = 40 PSF.
WIND LOAD = 80 MPH, EXPOSURE B
SEISMIC = ZONE 1.

4.0 FOUNDATION:

4.1 THE FOUNDATION CONSISTS OF A REINFORCED CONCRETE PAD WITH THICKENED EDGE. A M-2 OCCUPANCY WAS UTILIZIED FOR THI S-DESIGN. A MINIMUM 2'-0" STRUCTURAL FILL LAYER SHOULD BE CONSTRUCTED BELOW THE PAD FOUNDATION. CONSTRUCTED ACCORDING TO A RECOMMENDED PROCTOR DENSITY BY A REGISTERED GEOTECHNICAL ENGINEER

5.0 MATERIALS:

5.1 GROUT:
5.1.1 GROUT TO BE LOW SHRINK, HIGH STRENGTH DRY PACK, MINIMUM STRENGTH 3000 PSI.
5.2 CONCRETE:
5.2.1 ALL CONCRETE TO DEVELOP 3000 PSI COMPRESSIVE STRENGTH IN 28 DAYS.
5.2.2 MAKE ALL BARS CONTINUOUS AROUND CORNERS AND ACROSS STEP-DOWNS.
5.2.3 REINFORCING STEEL SHALL CONFORM TO ASTM A615, GRADE 40. LAP BARS A MINIMUM OF 18" AT ALL SPLICES.
5.3 STEEL
5.3.1 ALL STEEL ANGLES TO BE CARBON A36 STEEL, Fy MINIMUM YIELD STRESS 36 KSI. Fu TENSILE STRESS 58-80 KSI.
5.3.2 ALL BOLTS TO BE A307 HIGH STRENGTH.

6.0 THE CONTRACTOR SHOULD VERIFY ALL DIMENSIONS ON THIS PLAN PRIOR TO CONSTRUCTION.

7.0 IF ANY CHANGES ARE REQUIRED THIS OFFICE SHOULD BE CONTACTED.

8.0 THE CLIENT AND ENGINEER HAVE DISCUSSED THE RISK OF SETTLEMENT IN THE LANDFILL AREA, AND IT IS UNDERSTOOD THAT SETTLEMENT WILL OCCUR AND AFFECT THE OVERALL LEVELNESS OF THE FOUNDATION IN THE FUTURE. THE FOUNDATION PLANS BEING PROVIDED WILL ALLOW CONSTRUCTION OF THE REQUIRED BUILDINGS AND COMPONENTS OF THE GAS EXTRACTION SYSTEM. THIS OFFICE IS NOT LIABLE FOR ANY FUTURE CHANGES IN THE FOUNDATION SYSTEMS DUE TO SETTLEMENT IN THE LANDFILL.

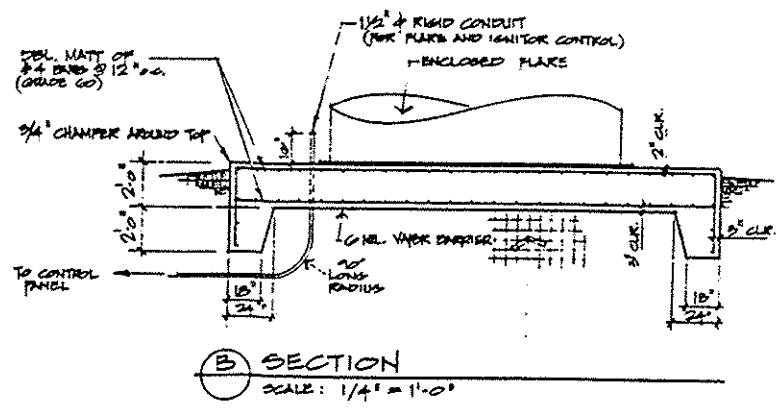

B SECTION
SCALE: 1/4" = 1'-0"

NOTE: ALL FOUNDATION PADS TO BE PLACED ON MINIMUM 2'-0" COMPACTED STRUCTURAL FILL PLACED ACCORDING TO GEOTECHNICAL PROCTOR DENSITY SPECIFICATIONS.

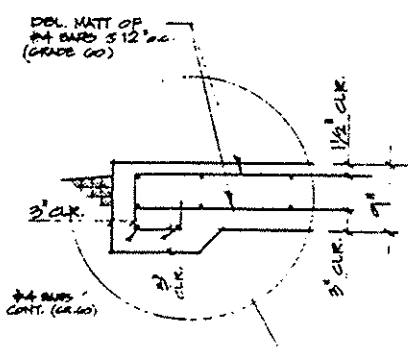

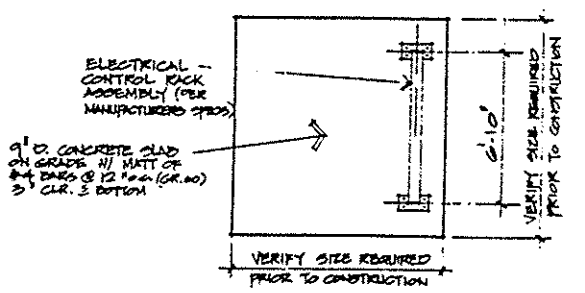

CONTROL RACK FOUNDATION
SC: 1/4" = 1'-0"

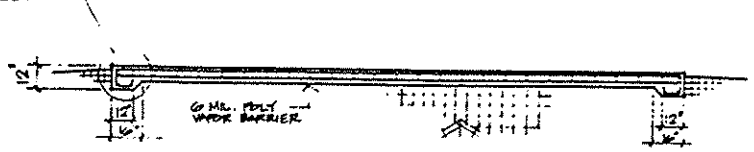

A SECTION
SCALE: 1/4" = 1'-0"

NOTE: FOUNDATION PAD TO BE PLACED ON MINIMUM 2'-0" COMPACTED STRUCTURAL FILL PLACED ACCORDING TO GEOTECHNICAL PROCTOR DENSITY SPECIFICATIONS.

MCM STRUCTURAL ENGINEERING
950 SOUTH CHERRY STREET, SUITE 916
DENVER, COLORADO 80222
(303) 782-0055

BLOWER BUILDING FOUNDATION & DETAILS

ORGANIC WASTE TECHNOLOGIES, INC.
GAS EXTRACTION SYSTEM
SAND CREEK LANDFILL
DENVER, COLORADO

DATE:	3-26-91
DRAWN BY:	GSJ
CHECKED BY:	MCM
PROJ. NO.:	912226
REVISION: BY/DATE	

SHEET NUMBER
SHEET 13