NOTE:
CONTRACTOR TO GROUND BLOWER BASES AND ALL PIPE WITHIN BLOWER BUILDING TO PREVENT BUILDUP OF STATIC ELECTRICITY.

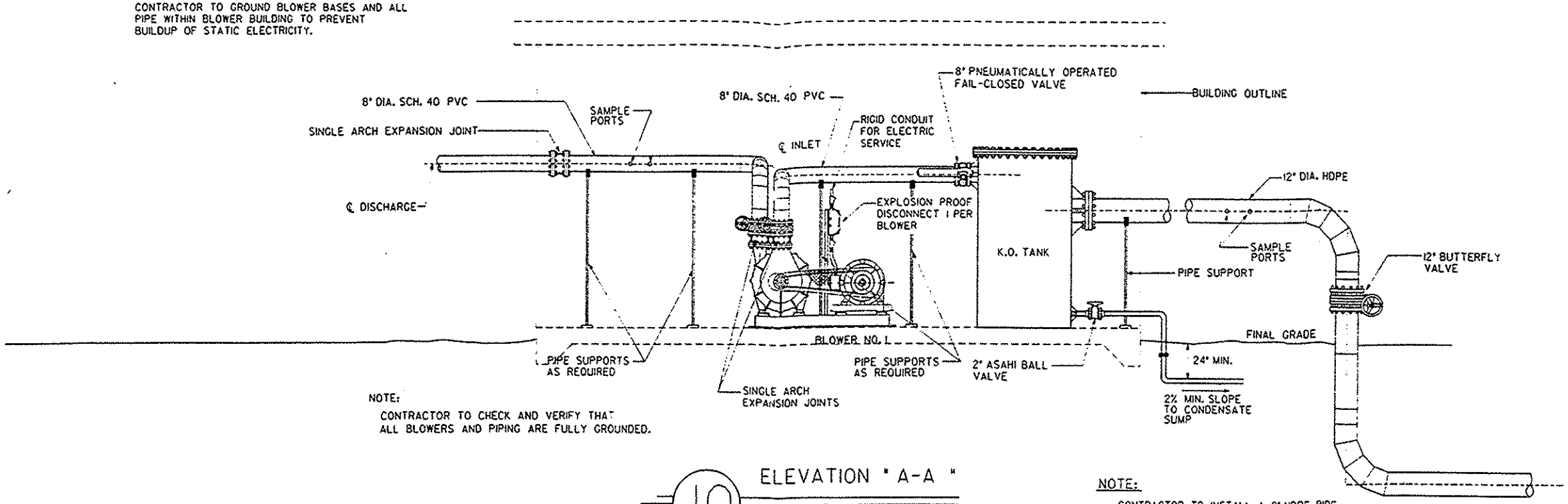

NOTE:
CONTRACTOR TO CHECK AND VERIFY THAT ALL BLOWERS AND PIPING ARE FULLY GROUNDED.

10 ELEVATION " A-A "

N.T.S.

NOTE:
CONTRACTOR TO INSTALL A 2" HDPE PIPE FROM K. O. TANK TO THE MAIN HEADER. LOCATION AND SLOPE OF PIPE TO BE APPROVED BY BFI ENGINEER OR COMPANY REPRESENTATIVE PRIOR TO INSTALLATION.

NOTE: CONTRACTOR TO INSTALL 4" INSULATION ON ALL WALLS AND CEILING OF BLOWER BUILDING.

DESIGN TEMPERATURE = 150° F
DESIGN PRESSURE = -100" W.C.
FLUID = CORROSIVE (ACIDIC CONDENSATE)

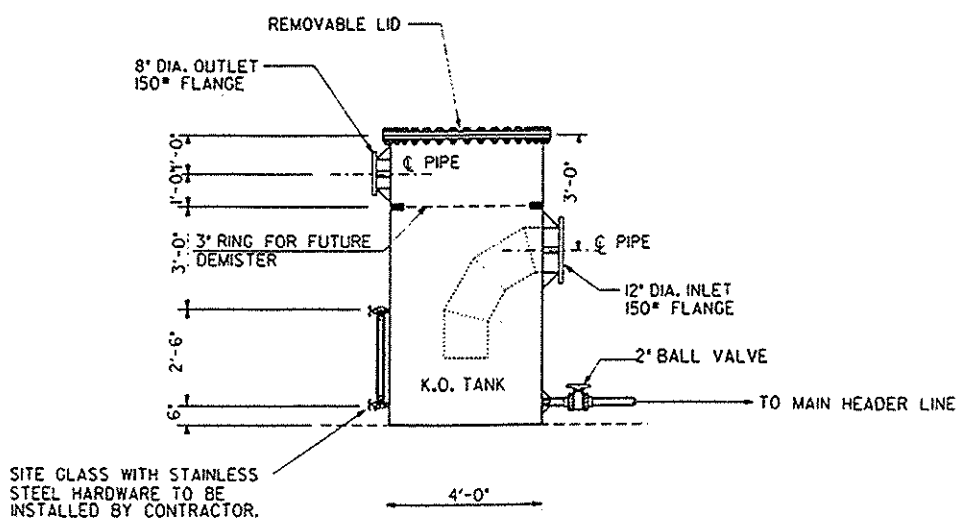

11 KNOCK-OUT POT DETAIL

N.T.S.

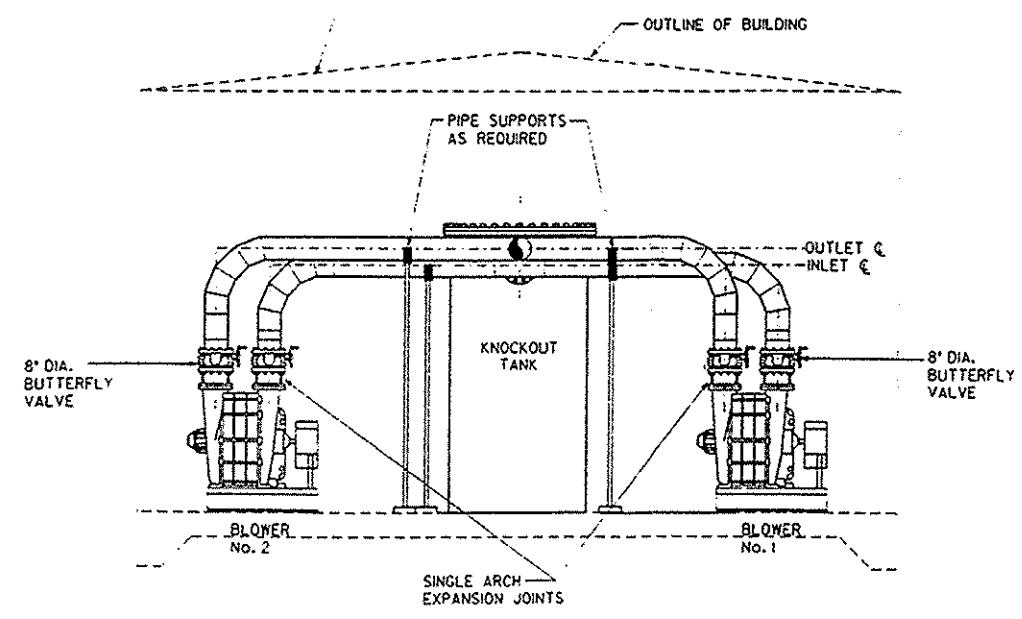

12 ELEVATION " B-B "

REV	DESCRIPTION	DATE	BY

BFI
BROWNING-FERRIS INDUSTRIES
GAS SYSTEMS
757 N. ELDRIDGE - P.O.BOX 3591 - HOUSTON, TEXAS 77253 - (713) 870-8100

SCALE NTS
DATE AUG. 1991
ENGINEER D.A.W.
DRAWN BY A.D.W.
APPROVED BY
PROJECT NUMBER

TITLE BLOWER BUILDING PIPING PLANS, DETAILS AND ELEVATIONS
PROJECT NAME AND LOCATION GAS EXTRACTION SYSTEM
SAND CREEK LANDFILL
DENVER, COLORADO

DRAWING NUMBER SHEET 11