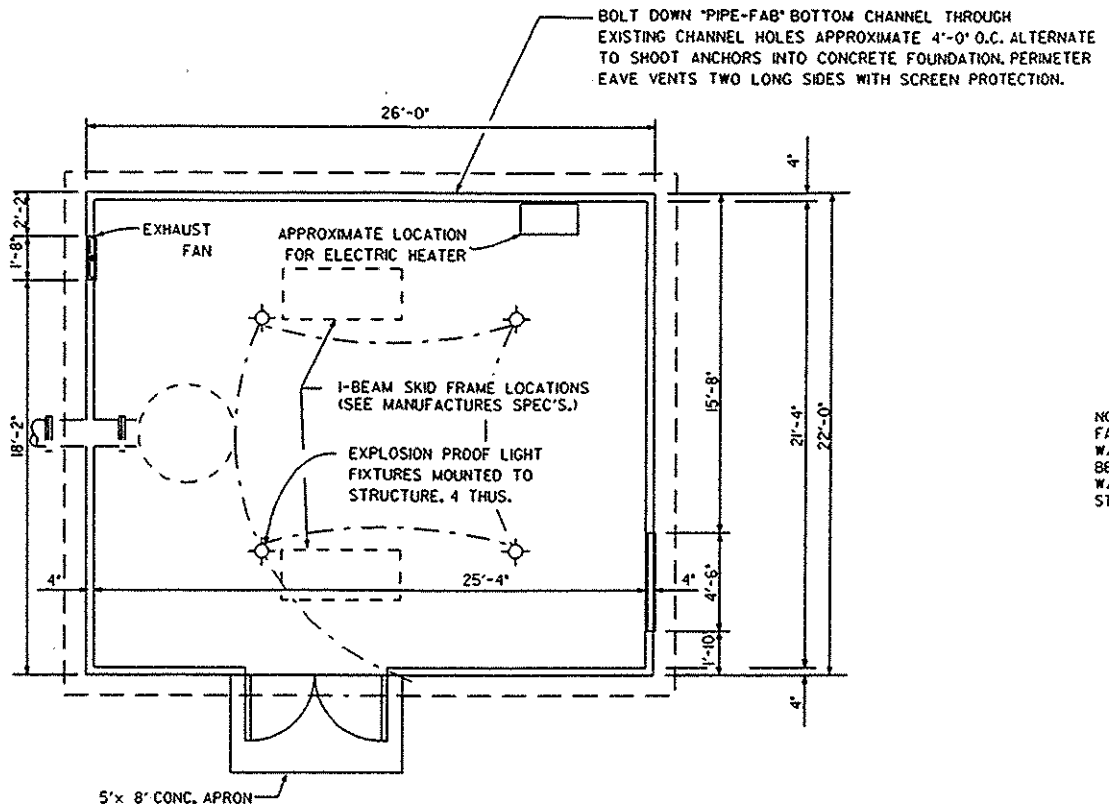

FLOOR PLAN

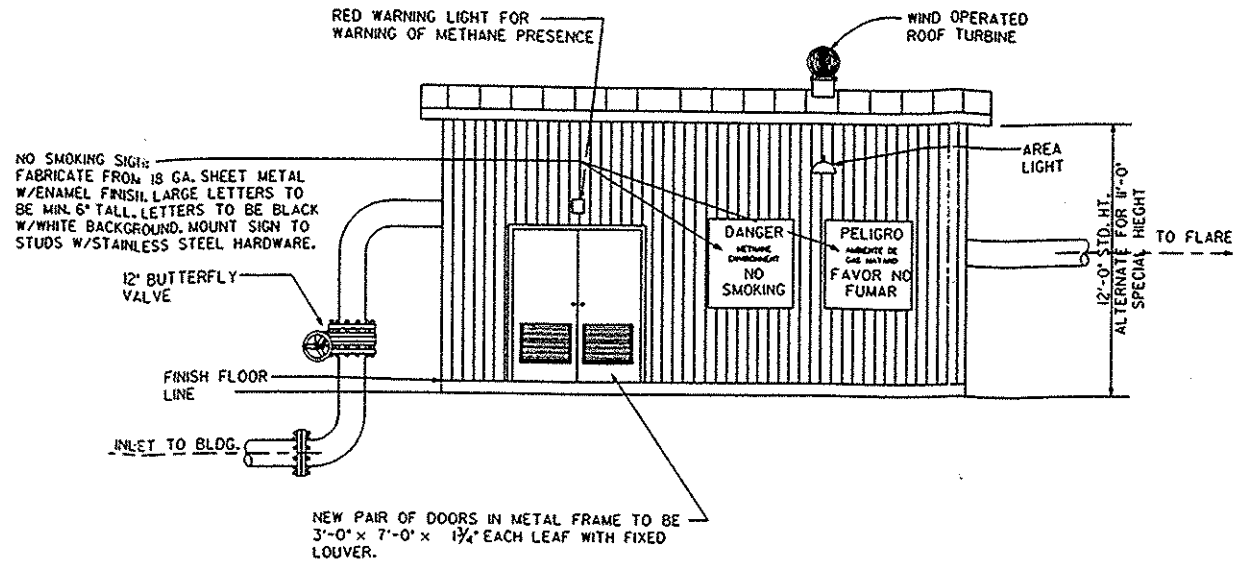

WEST ELEVATION

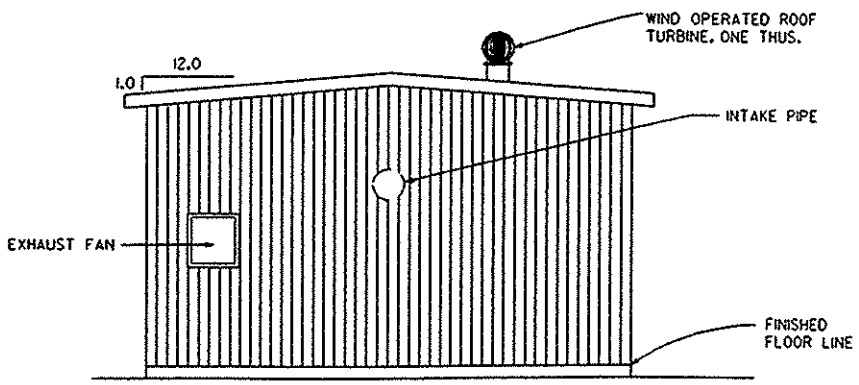

SOUTH ELEVATION

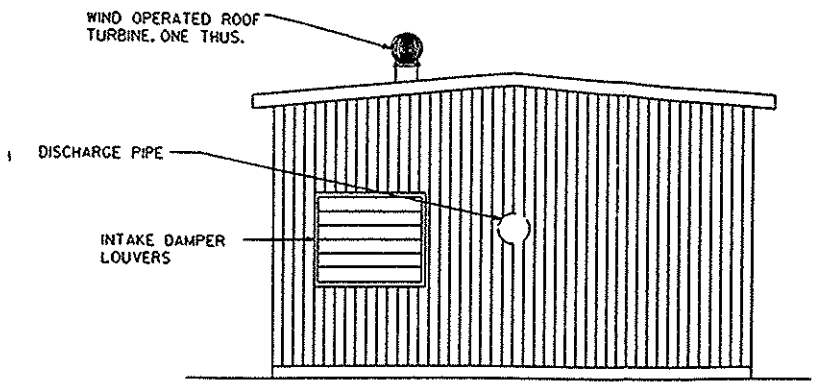

NORTH ELEVATION

REV	DESCRIPTION	DATE	BY

BFI
BROWNING-FERRIS INDUSTRIES
GAS SYSTEMS
757 N. ELDRIDGE - P.O.BOX 3151 - HOUSTON, TEXAS 77253 - (713) 870-8100

SCALE: NTS
DATE: AUG. 1991
ENGINEER: D.A.W.
DRAWN BY: A.D.W.
APPROVED BY:
PROJECT NUMBER:

TITLE: BLOWER BUILDING PLANS, DETAILS AND ELEVATIONS

PROJECT NAME AND LOCATION: GAS EXTRACTION SYSTEM
SAND CREEK LANDFILL
DENVER, COLORADO

DRAWING NUMBER: SHEET 12