(MAT'L CODE 330) **BILL OF MATERIAL** (1 REQ'D)

ITEM	QTY.	DESCRIPTION	MAT'L
1	11 L.F.	PIPE , 1" XS , SMLS.	SA-106-B
2	6 L.F.	PIPE , 1/2" XS , SMLS.	SA-106-B
3	3	PIPE NIPPLE , 1/2" XS x 3" LG. (T.B.E.)	SA-106-B
4	1	PIPE NIPPLE , 1" XS x 3" LG. (T.B.E.)	SA-106-B
5	1	ELL. 90° , 1"-2000 LB. , SCR'D.	SA-105
6	1	TEE , 1"-2000 LB. , SCR'D.	SA-105
7	1	TEE , 1/2"-2000 LB. , SCR'D.	SA-105
8	1	RED. TEE , 1" x 1/2" - 2000 LB. , SCR'D.	SA-105
9	2	UNION , 1" - 3000 LB. , SCR'D. (INTERGRAL SEATS)	SA-105
10	2	UNION , 1/2" - 3000 LB. , SCR'D. (INTERGRAL SEATS)	SA-105
11	1	SWAGE CONC. , 1" x 1/2" , XS (T.B.E.)	SA-105
12	20	HEX NUT , 1/4"ø	C.S. ZINC PL
13	2	U - BOLT , 1/2" PIPE SIZE	C.S. ZINC PL
14	3	U - BOLT , 1" PIPE SIZE	C.S. ZINC PL
15	1	PL 1/2" x 6" x 1'-4" LG. (DRILL / DWG)	A-36
16	2	PL 1/4" x 5" x 5" LG. (ONE MAKES TWO)	A-36
17	44 L.F.	[6 x 8.2	A-36
18	5 L.F.	L 2" x 2" x 1/4"	A-36
19	8	HEX NUT , 3/8"ø	C.S. ZINC PL
20	2	U - BOLT , 1 1/2" PIPE SIZE	C.S. ZINC PL
21	1	PL 1/4" x 1'-2" x 4'-3 1/8" LG.	A-36
22	1	PL 1/2" x 1'-2" x 1'-4" LG. (DRILL / DWG)	A-36
23	1	PIPE , 10" SCH 40 , ERW , 2" LG	AP-5L
24	1	McMASTER-CARR #3597T15 HEEL COIL CHAIN 2'-0" LG	
25	1	McMASTER-CARR #3717T42 FAST EYE SNAP	
26	1	PL 1/4" x 1'-2" x 1'-2" LG.	A-36

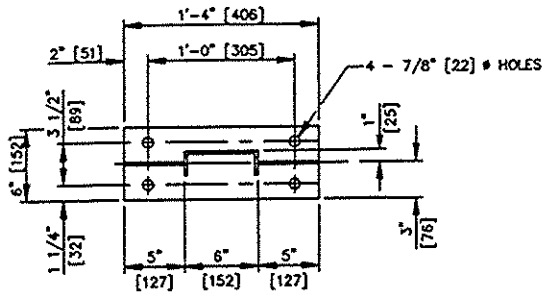

SECTION B-B

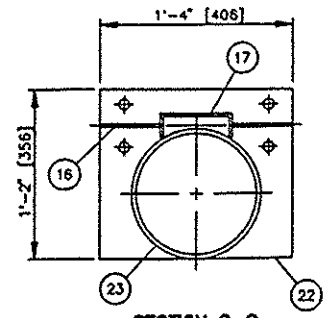

SECTION C-C

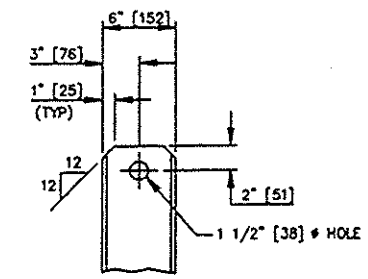

DETAIL A

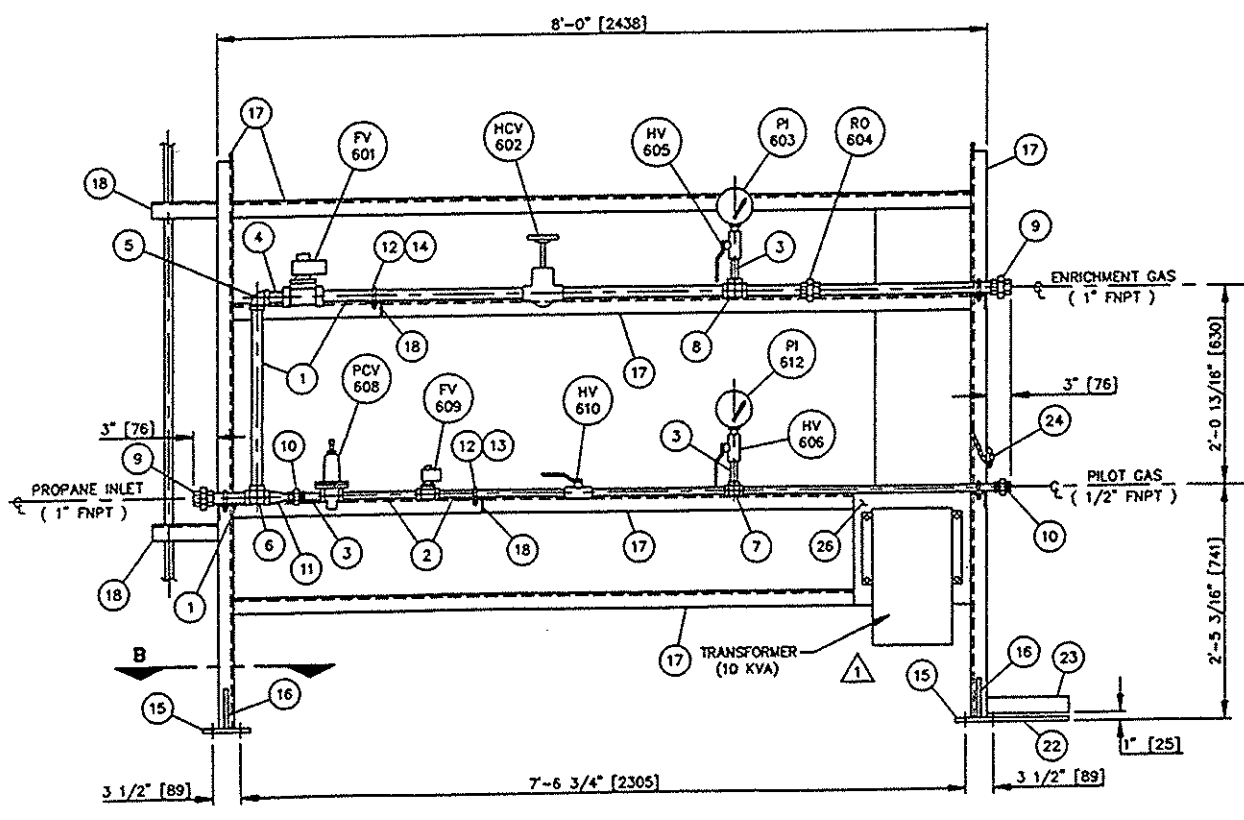

FRONT VIEW

(1 REQ'D. TAG : 50-101-1)

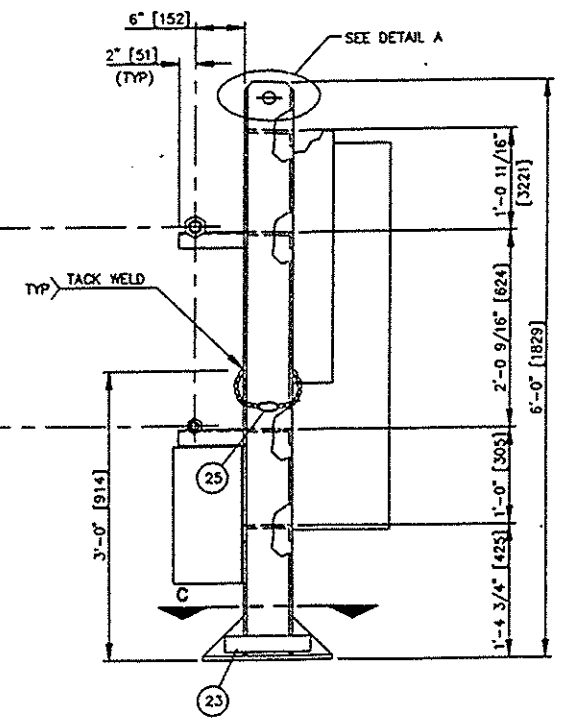

END VIEW

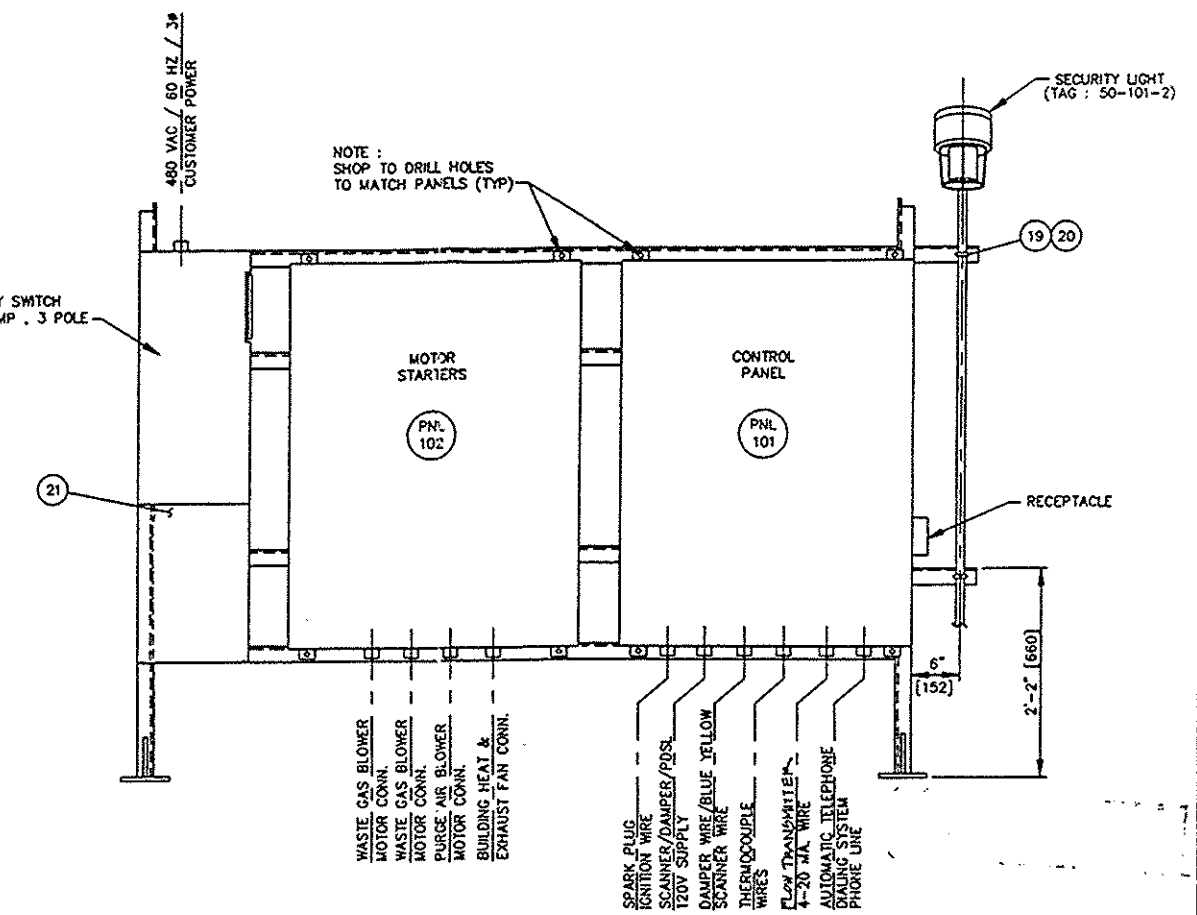

BACK VIEW

REVISED
DESTROY ALL PRIOR DWGS

SHOP CODE 430

120569

Notes :

1: TAG NO'S TO BE PRECEDED BY McGILL JOB NO.

2: ENCLOSURES ARE NEMA 4

3: FINISH - (EXT. C.S.) SANDBLAST / SSPC-SP-6 & PRIME W/ DIMETCOTE "EZ-II" (2 1/2 MILS M.D.F.T.)

No.	Date	By	Chk'd	Appd	Description
2	5/30/91	DAKH	[illegible]	[illegible]	REVISED PER ECN 4833
1	3/28/91	VB	[illegible]	[illegible]	E.C.N. NO. 4833

Dwg. No.	Subject

Reference Drawings

This drawing is the property of and intended only for the private use of IT/McGILL Pollution Control Systems and may not be reproduced or given to third parties without prior written consent.

Customer B.F.I.

Drawn	S.F.
Date	2/27/91
Scale	1"=1'-0"
Checked	DAVID
App'd	DC

CONTROL RACK ASSEMBLY
(ENCLOSED GROUND FLARE)

IT McGill Pollution Control Systems
Tulsa, Oklahoma

P.O. No. 9539

Revision No. 2

Drawing No. D-120575-50-101

Sheet 1 of 1