ELEVATION VIEW
Looking West

NTS

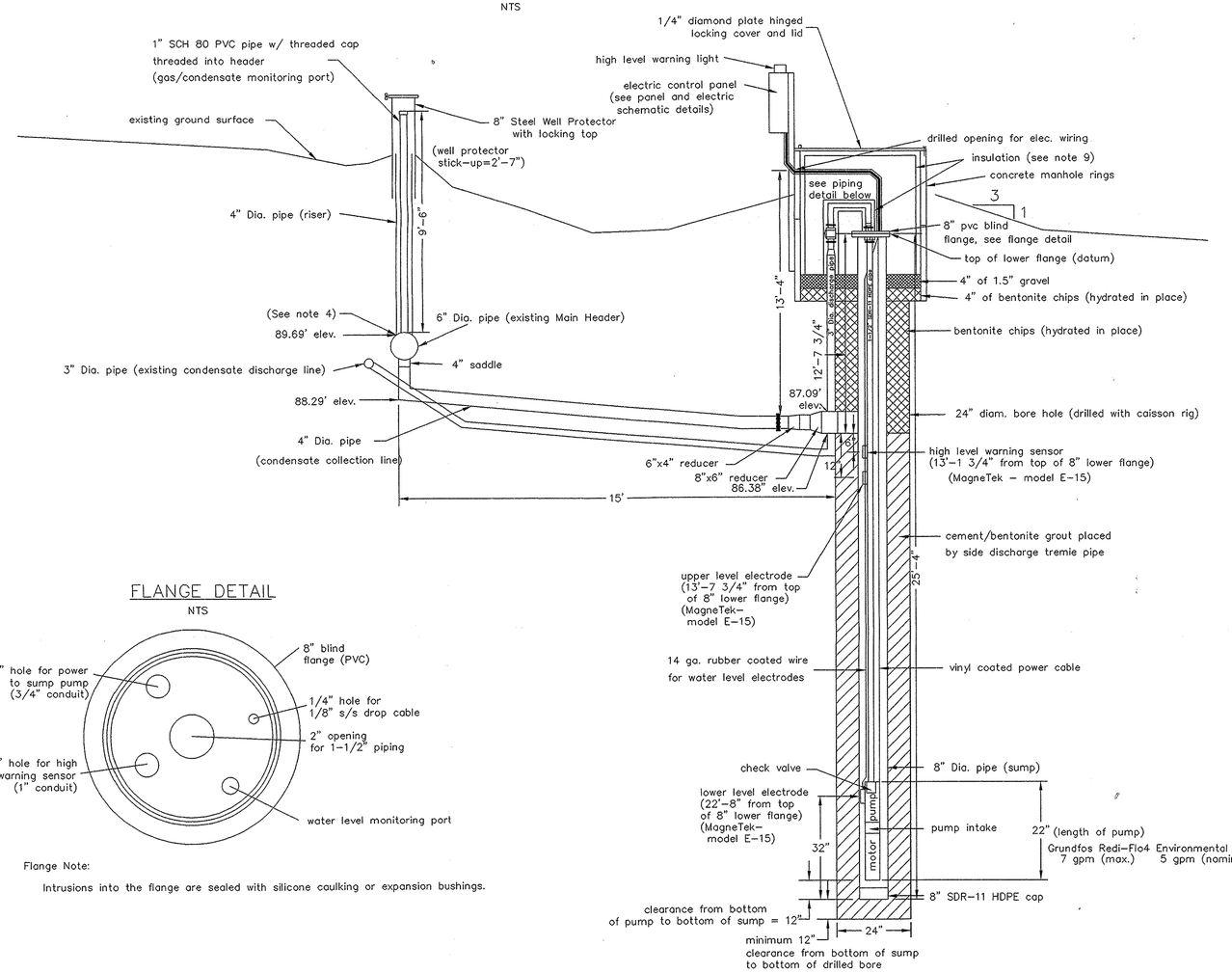

FLANGE DETAIL

NTS

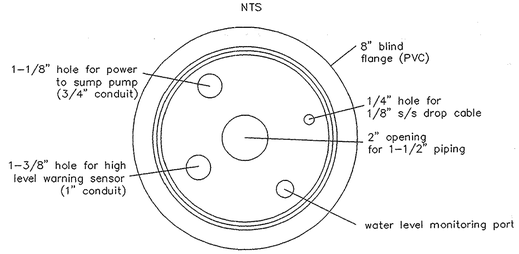

Flange Note:

Intrusions into the flange are sealed with silicone caulking or expansion bushings.

PLAN VIEW
CS-1

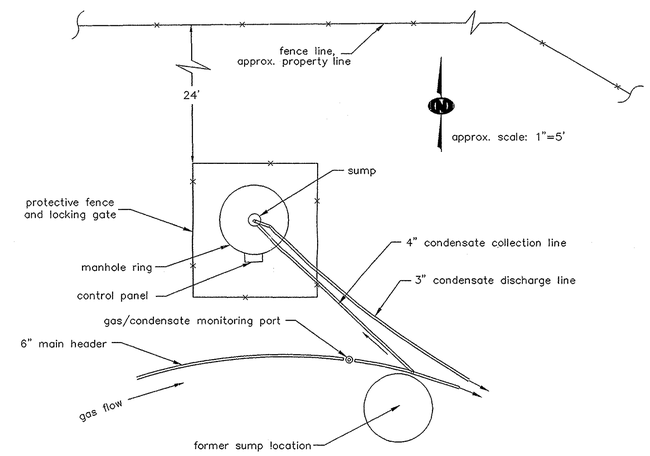

Plan View Notes:
1. Pipeline locations are approximate
2. Pipeline locations are marked with early warning tape approx. 4' above the pipe

PANEL DETAIL

NTS

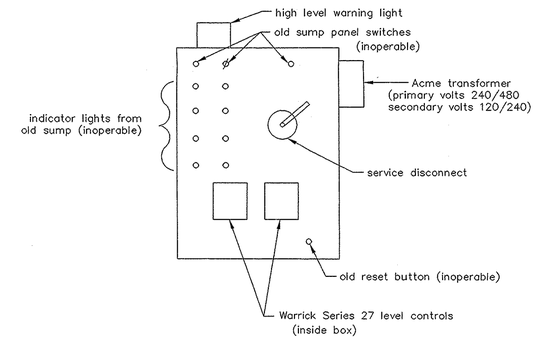

ELECTRIC SCHEMATIC DETAIL (SHOP DRAWING)

NTS

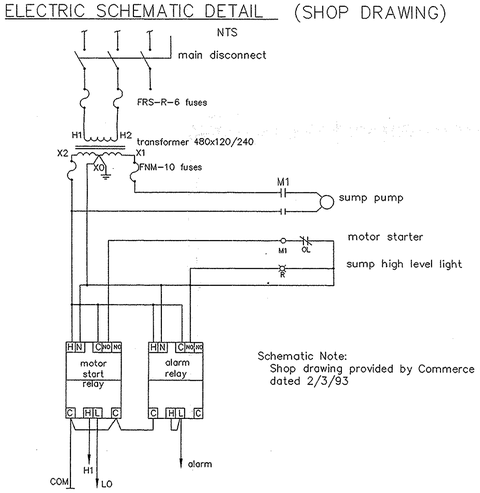

Schematic Note:
Shop drawing provided by Commerce City Electric Co., dated 2/3/93

General Notes:

1. This drawing is based on Browning Ferris Industries Gas Systems general condensate pump station design. Modifications were made to the general design in order to address existing site conditions.
2. Except where noted, all pipe and reducers consist of SDR-11 HDPE pipe.
3. The 4" saddle was fused to the 6" Main Header (Main Header "T") at the low point of the Main Header.
4. The 1" SCH 80 PVC pipe (gas/condensate monitoring port) was offset 4.5' to the west of the Main Header "T" along Main Header.
5. After the top manhole rings and the re-usable sump equipment were removed, the previously existing sump was backfilled with soil.
6. The sump/pump station and electrical control panel are completely enclosed with fence and locking gate.
7. The benchmark for elevations listed was the cenber of the cover for EW-11 (assumed elevation = 100.00'). Elevations were established for construction purposes. only.
8. To prevent freezing of condensate, interior walls and lid of concrete manhole rings and exposed condensate piping within the manhole are covered or wrapped with insulation. R values for wall and lid insulation are R-11 and R-16.8 respectively. Insulation for piping consists of pipe wrap.

PIPING DETAIL, INSIDE OF MANHOLE

NTS

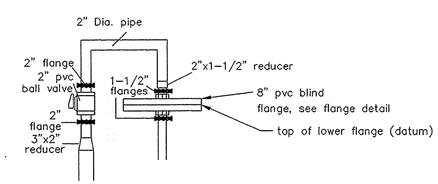

KRW CONSULTING, INC.
LAKEWOOD, COLORADO 80215

CS-1 CONDENSATE SUMP/PUMP STATION
48TH AND HOLLY LANDFILL, DENVER COLORADO
MECHANICAL DRAWING

FIGURE NO. 1

DATE	REVISIONS
05/02/93	REMOVED BALL VALVE/KEY AND RESPECTIVE NOTES

FIGURE NO. 1

DESIGNED BY: BFI/KRW	CHECKED BY: JAH
DATE: 02/93	DRAWN BY: DLH
FILE NAME: CSNEW	SCALE: NONE
PROJECT NO: 9106-01	SHEET NO. 1 of 4

ELEVATION VIEW
Looking ~ West

NTS

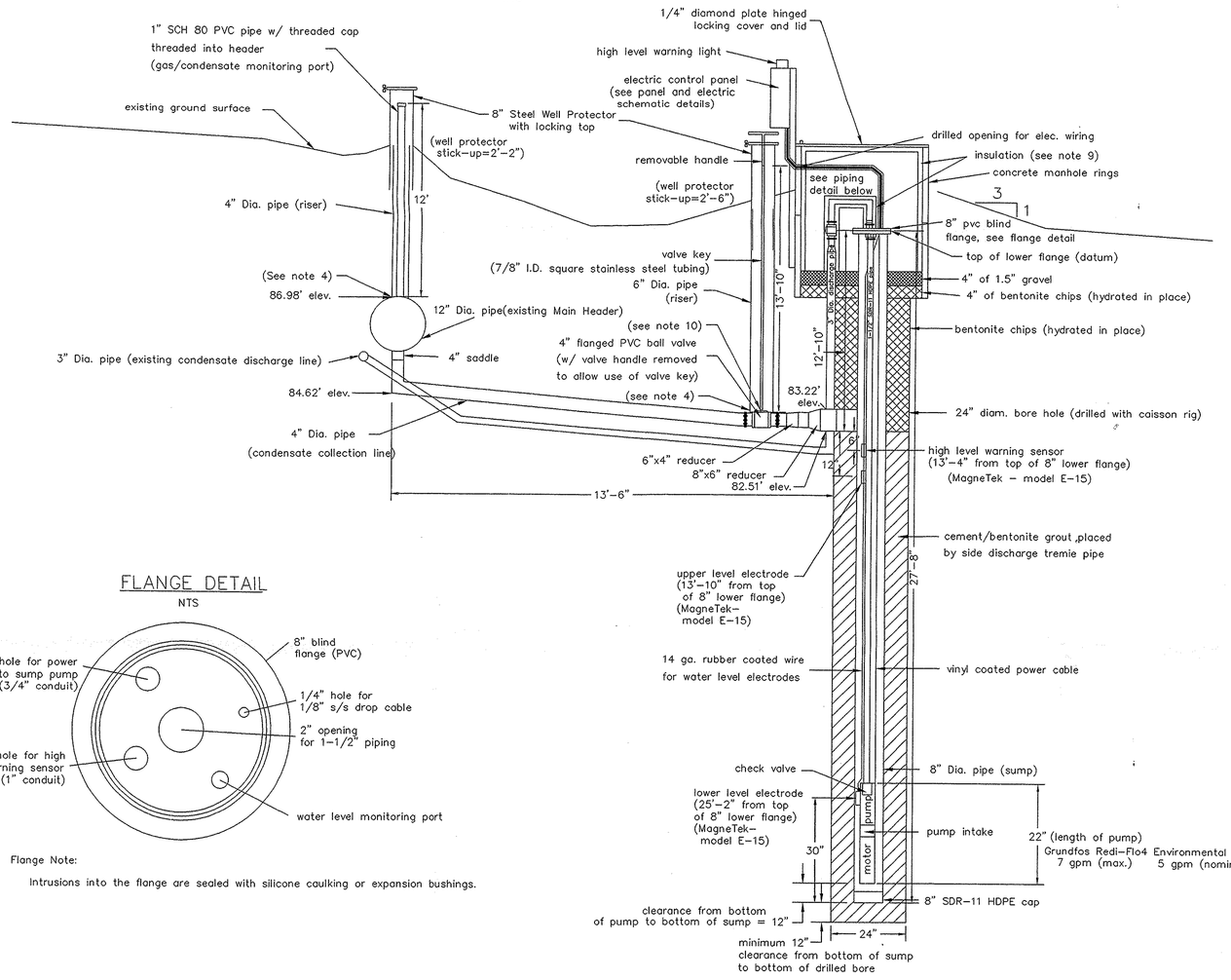

PLAN VIEW
CS-2

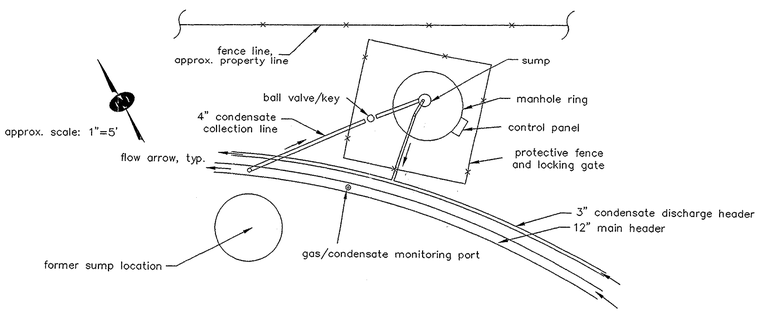

Plan View Notes:
1. Pipeline locations are approximate
2. Pipeline locations are marked with early warning tape approx. 4' above the pipe

FLANGE DETAIL

NTS

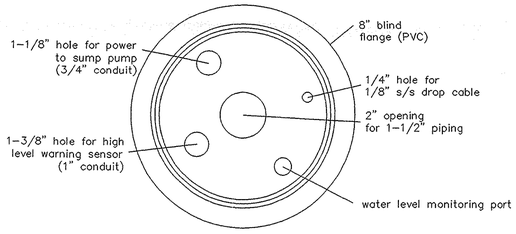

Flange Note:

Intrusions into the flange are sealed with silicone caulking or expansion bushings.

PANEL DETAIL

NTS

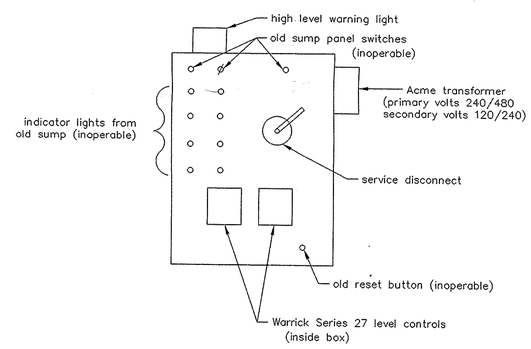

ELECTRIC SCHEMATIC DETAIL (SHOP DRAWING)

NTS

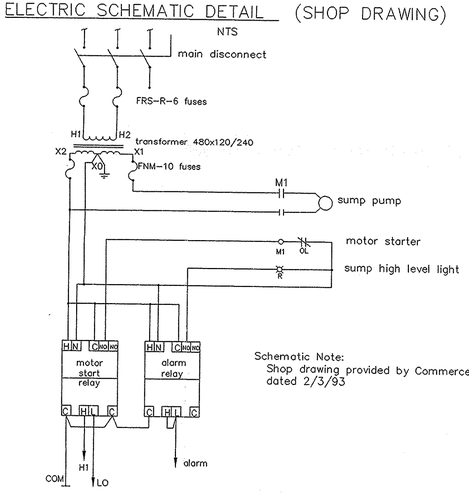

Schematic Note:
Shop drawing provided by Commerce City Electric Co., dated 2/3/93

General Notes:

1. This drawing is based on Browning Ferris Industries Gas Systems general condensate pump station design. Modifications were made to the general design in order to address existing site conditions.
2. Except where noted, all pipe and reducers consist of SDR-11 HDPE pipe.
3. The 4" saddle was fused to the 12" Main Header (Main Header "T") at the low point of the Main Header.
4. The bottom of the 4" and 6" SDR-11 pipe risers were sealed with duct tape to prevent soil intrusion during backfill operations.
5. The 1" SCH 80 PVC pipe (gas/condensate monitoring port) was offset 7' to the east of the Main Header "T" along Main Header.
6. After the top manhole rings and the re-usable sump equipment were removed, the previously existing sump was backfilled with soil.
7. The sump/pump station and electrical control panel are completely enclosed with fence and locking gate.
8. The benchmark for elevations listed was the center of the cover for S-5 (Assumed elevation = 100.00'). Elevations were established for construction purposes only.
9. To prevent freezing of condensate, interior walls and lid of concrete manhole rings and exposed condensate piping within the manhole are covered or wrapped with insulation. R values for wall and lid insulation are R-11 and R-16.8, respectively. Insulation for piping consists of pipe wrap.
10. The valve key is attached to the plastic ball valve stem with a stainless steel bolt and nut.

PIPING DETAIL, INSIDE OF MANHOLE

NTS

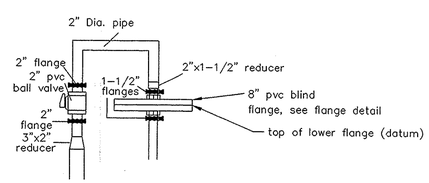

KRW CONSULTING, INC.
LAKEWOOD, COLORADO 80215

CS-2 CONDENSATE SUMP/PUMP STATION
48TH AND HOLLY LANDFILL, DENVER COLORADO
MECHANICAL DRAWING

FIGURE NO. 2

DATE	REVISIONS

DESIGNED BY: BFI/KRW	CHECKED BY: JAH
DATE: 02/93	DRAWN BY: DLH
FILE NAME: CSNEW	SCALE: NONE
PROJECT NO.: 9106-01	SHEET NO.: 2 of 4

ELEVATION VIEW
Looking ~ West

NTS

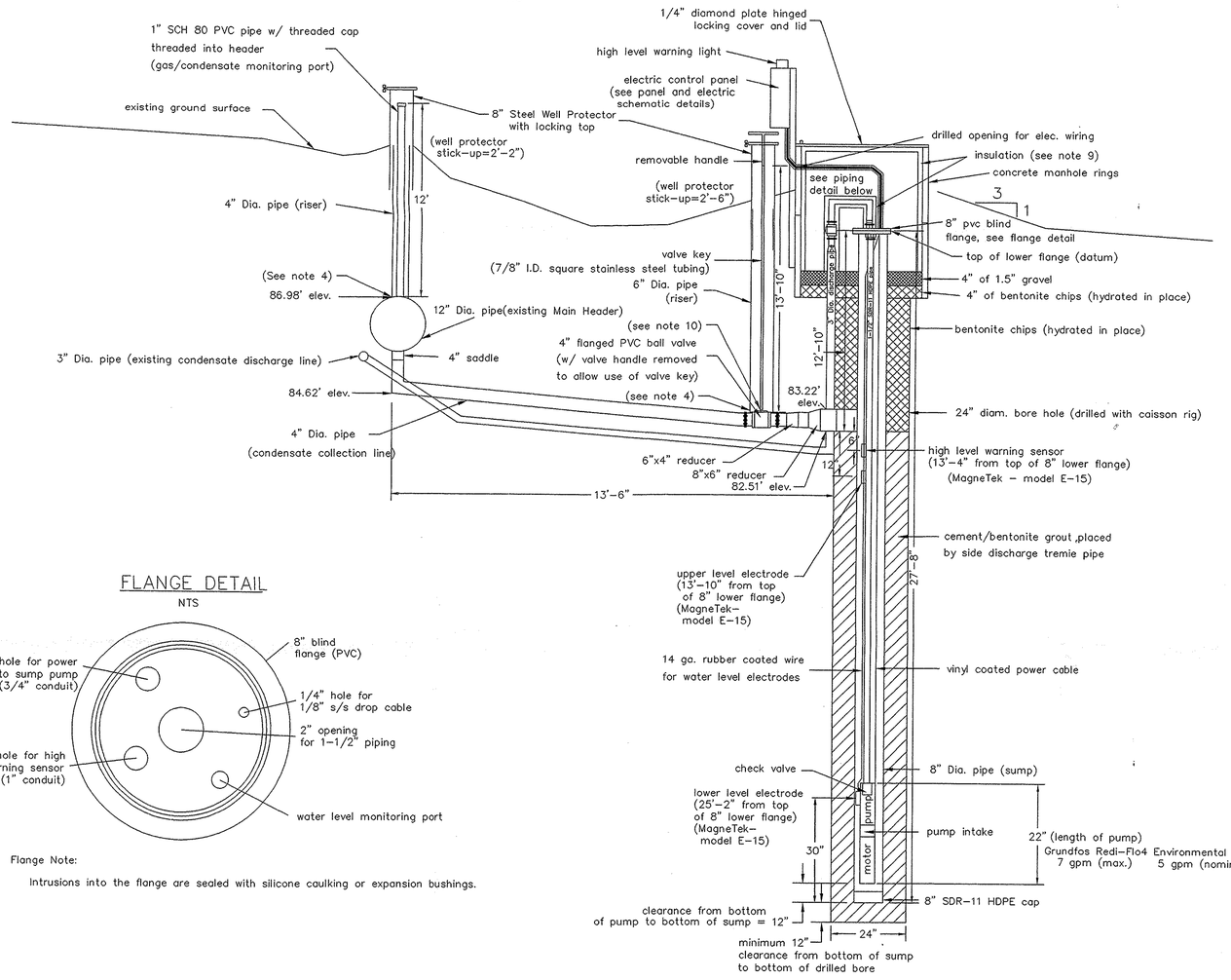

PLAN VIEW
CS-2

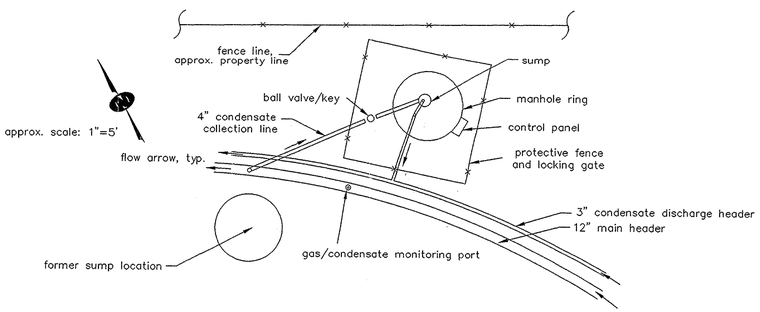

Plan View Notes:
1. Pipeline locations are approximate
2. Pipeline locations are marked with early warning tape approx. 4' above the pipe

FLANGE DETAIL

NTS

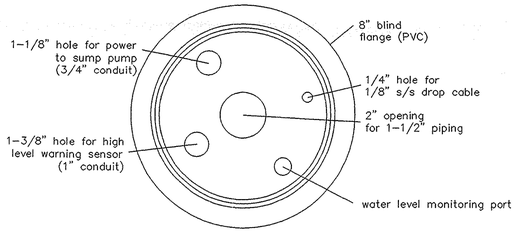

Flange Note:

Intrusions into the flange are sealed with silicone caulking or expansion bushings.

PANEL DETAIL

NTS

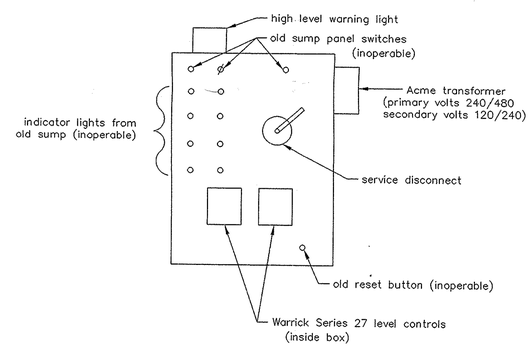

ELECTRIC SCHEMATIC DETAIL (SHOP DRAWING)

NTS

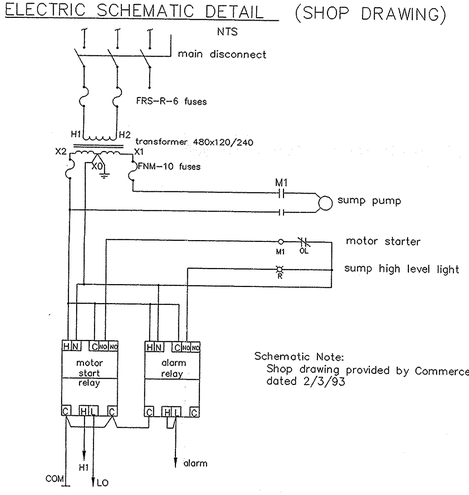

Schematic Note:
Shop drawing provided by Commerce City Electric Co., dated 2/3/93

General Notes:

1. This drawing is based on Browning Ferris Industries Gas Systems general condensate pump station design. Modifications were made to the general design in order to address existing site conditions.
2. Except where noted, all pipe and reducers consist of SDR-11 HDPE pipe.
3. The 4" saddle was fused to the 12" Main Header (Main Header "T") at the low point of the Main Header.
4. The bottom of the 4" and 6" SDR-11 pipe risers were sealed with duct tape to prevent soil intrusion during backfill operations.
5. The 1" SCH 80 PVC pipe (gas/condensate monitoring port) was offset 7' to the east of the Main Header "T" along Main Header.
6. After the top manhole rings and the re-usable sump equipment were removed, the previously existing sump was backfilled with soil.
7. The sump/pump station and electrical control panel are completely enclosed with fence and locking gate.
8. The benchmark for elevations listed was the center of the cover for S-5 (Assumed elevation = 100.00'). Elevations were established for construction purposes only.
9. To prevent freezing of condensate, interior walls and lid of concrete manhole rings and exposed condensate piping within the manhole are covered or wrapped with insulation. R values for wall and lid insulation are R-11 and R-16.8, respectively. Insulation for piping consists of pipe wrap.
10. The valve key is attached to the plastic ball valve stem with a stainless steel bolt and nut.

PIPING DETAIL, INSIDE OF MANHOLE

NTS

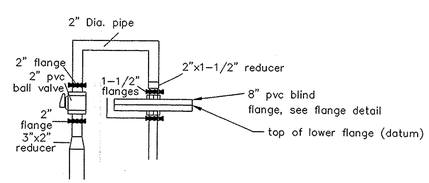

KRW CONSULTING, INC.
LAKEWOOD, COLORADO 80215

CS-2 CONDENSATE SUMP/PUMP STATION
48TH AND HOLLY LANDFILL, DENVER COLORADO
MECHANICAL DRAWING

FIGURE NO. 2

DATE	REVISIONS

DESIGNED BY: BFI/KRW	CHECKED BY: JAH
DATE: 02/93	DRAWN BY: DLH
FILE NAME: CSNEW	SCALE: NONE
PROJECT NO.: 9106-01	SHEET NO.: 2 of 4

ELEVATION VIEW
Looking ~ West

NTS

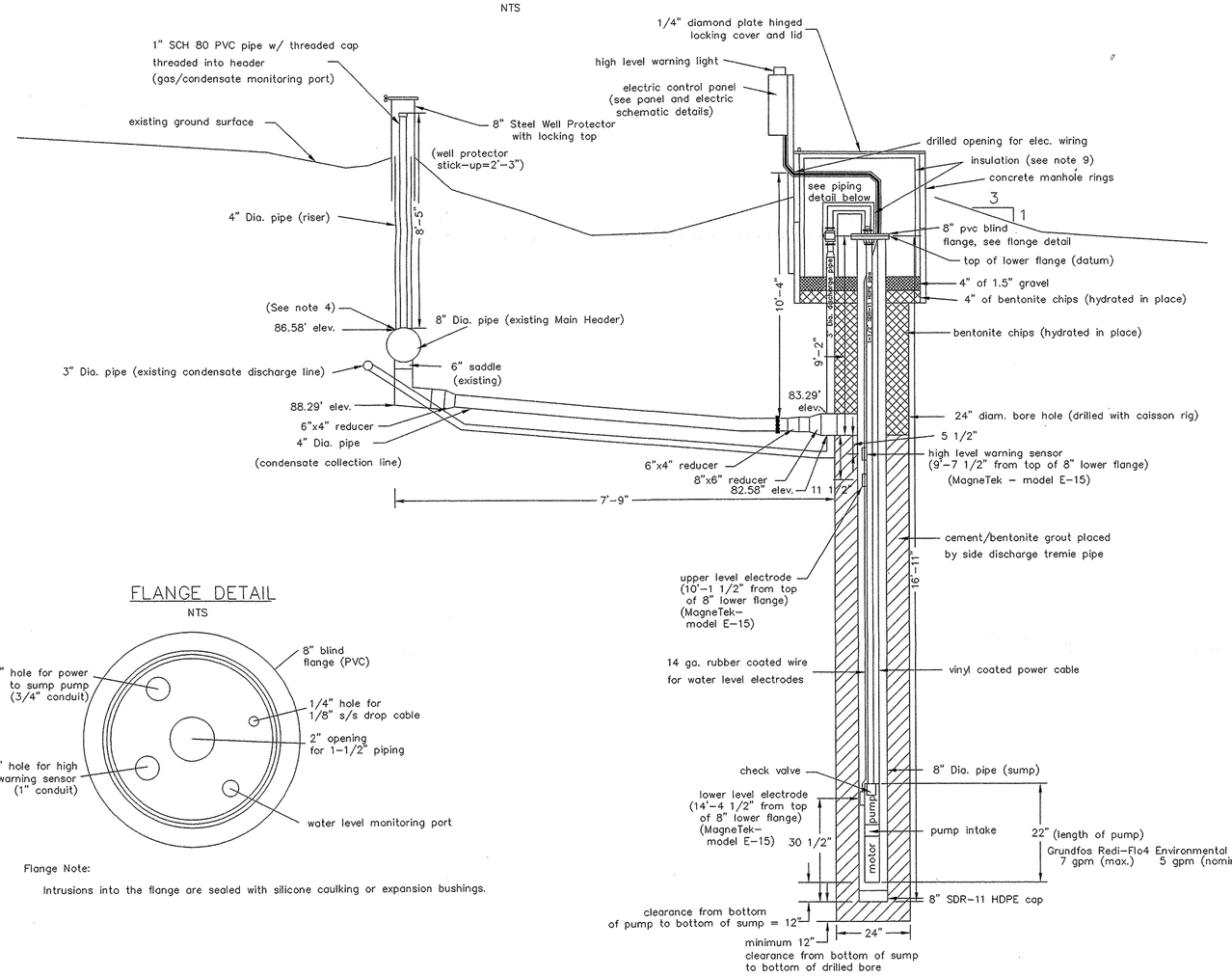

FLANGE DETAIL

NTS

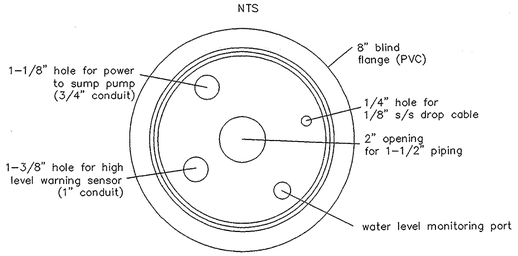

Flange Note:

Intrusions into the flange are sealed with silicone caulking or expansion bushings.

PLAN VIEW
CS-3

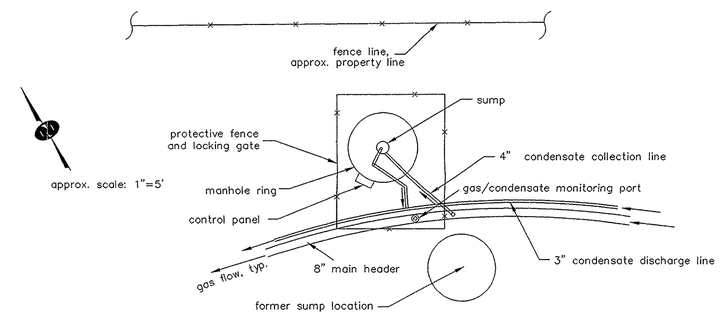

Plan View Notes:
1. Pipeline locations are approximate
2. Pipeline locations are marked with early warning tape approx. 4' above the pipe

PANEL DETAIL

NTS

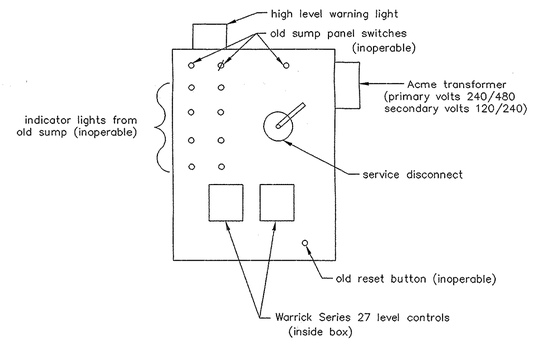

ELECTRIC SCHEMATIC DETAIL (SHOP DRAWING)

NTS

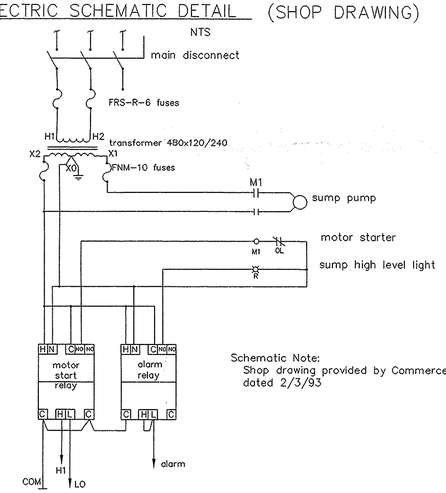

Schematic Note:
Shop drawing provided by Commerce City Electric Co., dated 2/3/93

PIPING DETAIL, INSIDE OF MANHOLE

NTS

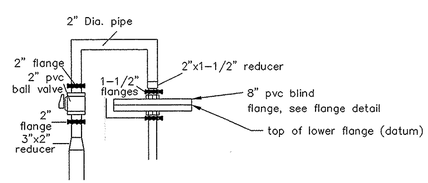

General Notes:

1. This drawing is based on Browning Ferris Industries Gas Systems general condensate pump station design. Modifications were made to the general design in order to address existing site conditions.
2. Except where noted, all pipe and reducers consist of SDR-11 HDPE pipe.
3. The 4" saddle was fused to the 6" Main Header (Main Header "T") at the low point of the Main Header.
4. The 1" SCH 80 PVC pipe (gas/condensate monitoring port) was offset 4.5' to the west of the Main Header "T" along Main Header.
5. After the top manhole rings and the re-usable sump equipment were removed, the previously existing sump was backfilled with soil.
6. The sump/pump station and electrical control panel are completely enclosed with fence and locking gate.
7. The benchmark for elevations listed was the center of the cover for EW-11 (assumed elevation = 100.00'). Elevations were established for construction purposes. only.
8. To prevent freezing of condensate, interior walls and lid of concrete manhole rings and exposed condensate piping within the manhole are covered or wrapped with insulation. R values for wall and lid insulation are R-11 and R-16.8 respectively. Insulation for piping consists of pipe wrap.

KRW CONSULTING, INC.
LAKEWOOD, COLORADO 80215

CS-3 CONDENSATE SUMP/PUMP STATION
48TH AND HOLLY LANDFILL, DENVER COLORADO
MECHANICAL DRAWING
FIGURE NO. 3

DATE	REVISIONS
05/02/02	REMOVED BALL VALVE/KEY AND RESPECTIVE NOTES

FIGURE NO. 3

DESIGNED BY: BFI/KRW	CHECKED BY: JAH
DATE: 02/93	DRAWN BY: DLH
FILE NAME: CSNEW	SCALE: NONE
PROJECT NO. 9106-01	SHEET NO. 3 of 4

ELEVATION VIEW
Looking ~ West

NTS

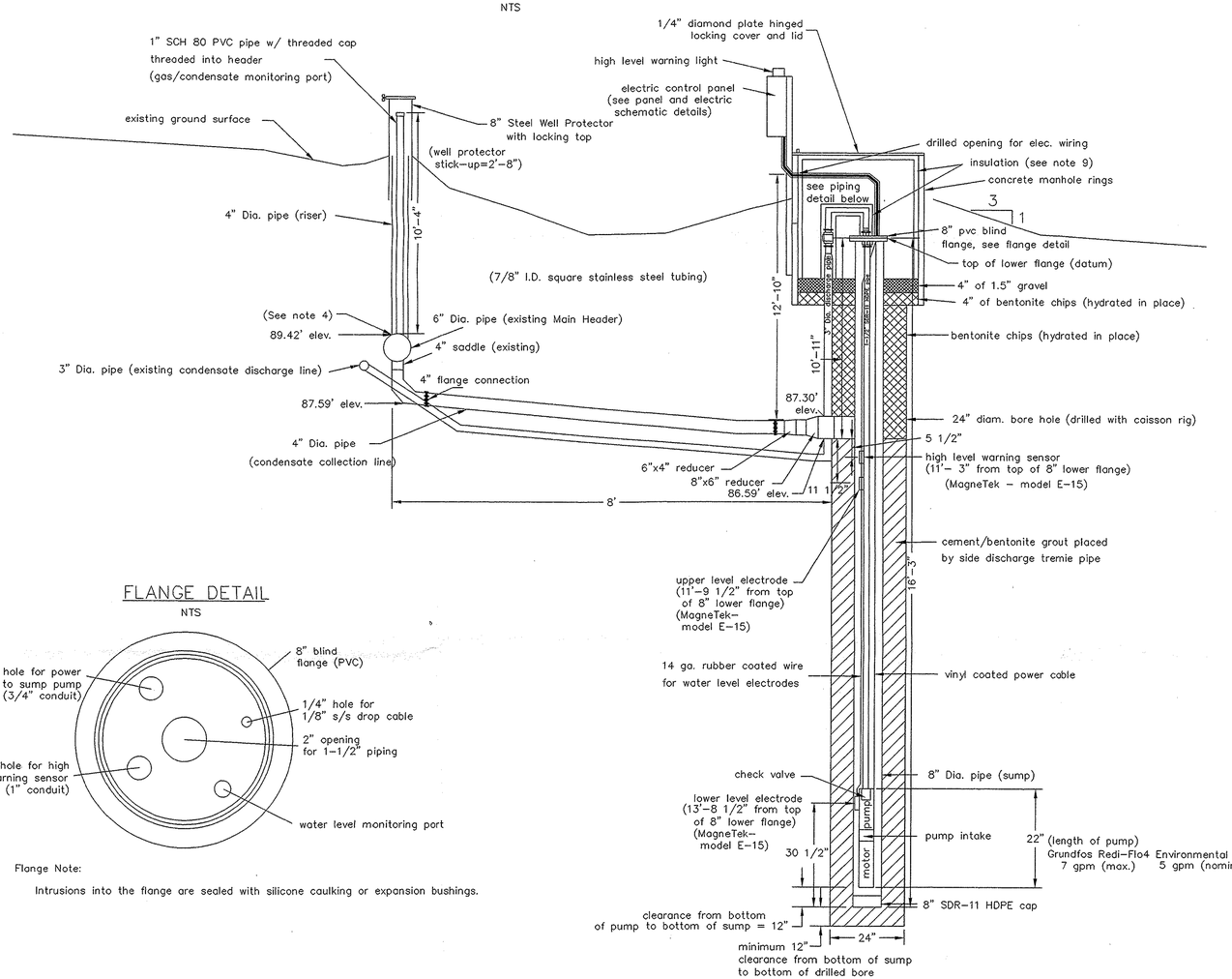

FLANGE DETAIL

NTS

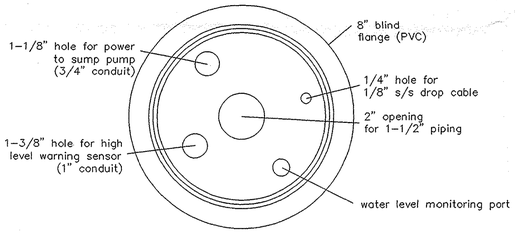

Flange Note:

Intrusions into the flange are sealed with silicone caulking or expansion bushings.

PLAN VIEW
CS-4

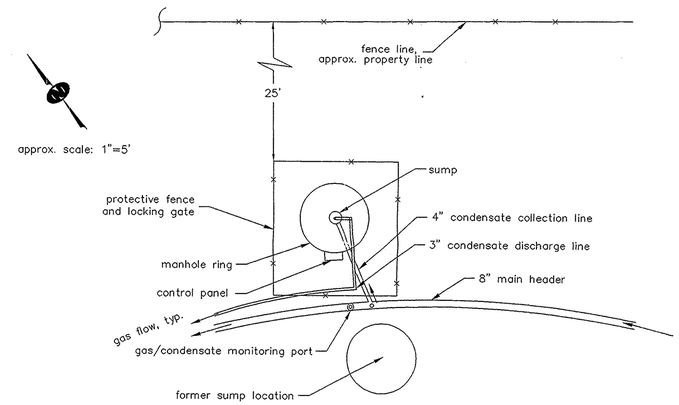

Plan View Notes:
1. Pipeline locations are approximate
2. Pipeline locations are marked with early warning tape approx. 4' above the pipe

PANEL DETAIL

NTS

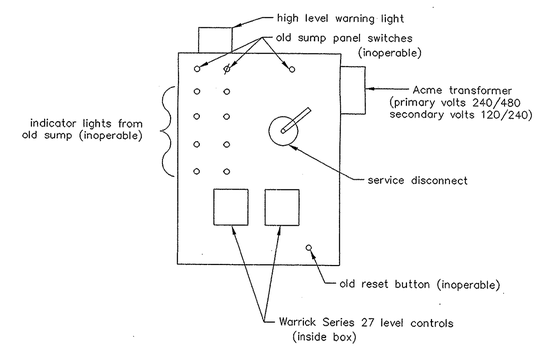

ELECTRIC SCHEMATIC DETAIL (SHOP DRAWING)

NTS

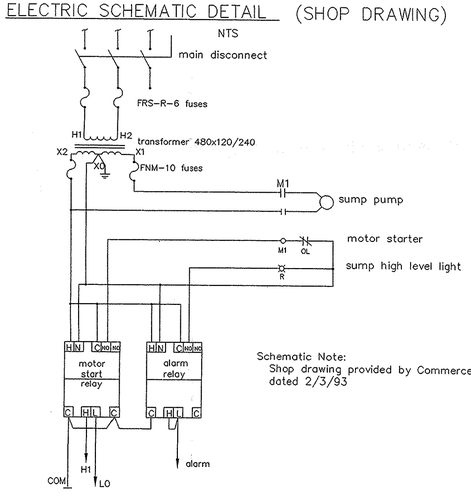

Schematic Note:
Shop drawing provided by Commerce City Electric Co., dated 2/3/93

General Notes:

1. This drawing is based on Browning Ferris Industries Gas Systems general condensate pump station design. Modifications were made to the general design in order to address existing site conditions.
2. Except where noted, all pipe and reducers consist of SDR-11 HDPE pipe.
3. The 4" saddle was fused to the 6" Main Header (Main Header "T") at the low point of the Main Header.
4. The 1" SCH 80 PVC pipe (gas/condensate monitoring port) was offset 4.5' to the west of the Main Header "T" along Main Header.
5. After the top manhole rings and the re-usable sump equipment were removed, the previously existing sump was backfilled with soil.
6. The sump/pump station and electrical control panel are completely enclosed with fence and locking gate.
7. The benchmark for elevations listed was the center of the cover for EW-11 (assumed elevation = 100.00'). Elevations were established for construction purposes. only.
8. To prevent freezing of condensate, interior walls and lid of concrete manhole rings and exposed condensate piping within the manhole are covered or wrapped with insulation. R values for wall and lid insulation are R-11 and R-16.8 respectively. Insulation for piping consists of pipe wrap.

PIPING DETAIL, INSIDE OF MANHOLE

NTS

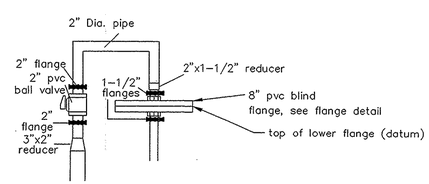

KRW CONSULTING, INC.
LAKEWOOD, COLORADO 80215

CS-4 CONDENSATE SUMP/PUMP STATION
48TH AND HOLLY LANDFILL, DENVER COLORADO
MECHANICAL DRAWING

FIGURE NO. 4

DATE	REVISIONS
00/02/02	REMOVED BALL VALVE/KEY AND RESPECTIVE NOTES

FIGURE NO. 4

DESIGNED BY: BFI/KRW	CHECKED BY: JAH
DATE: 02/93	DRAWN BY: DLH
FILE NAME: CSNEW	SCALE: NONE
PROJECT NO. 9106-01	SHEET NO. 4 of 4

ELEVATION VIEW
Looking ~ West

NTS

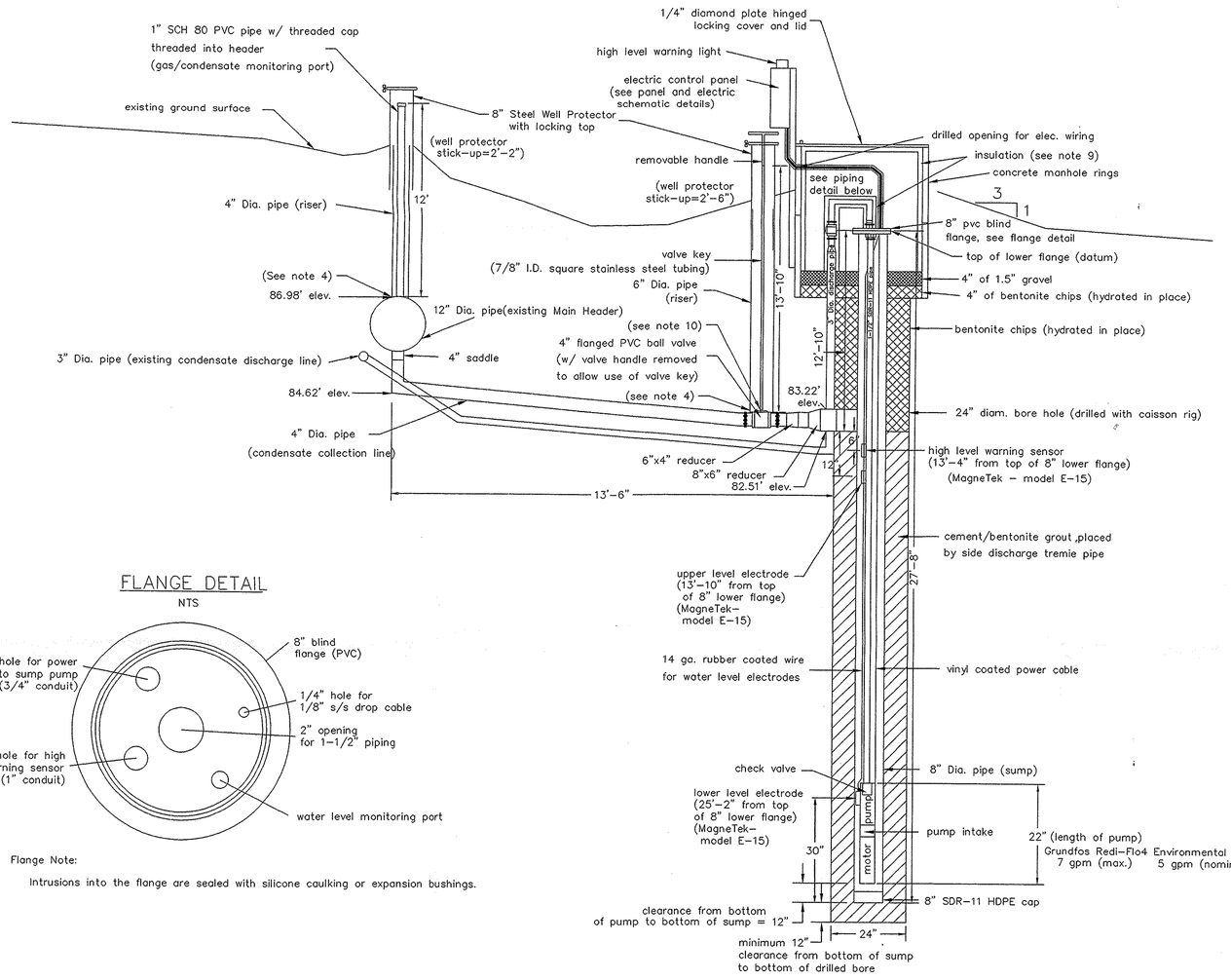

PLAN VIEW
CS-2

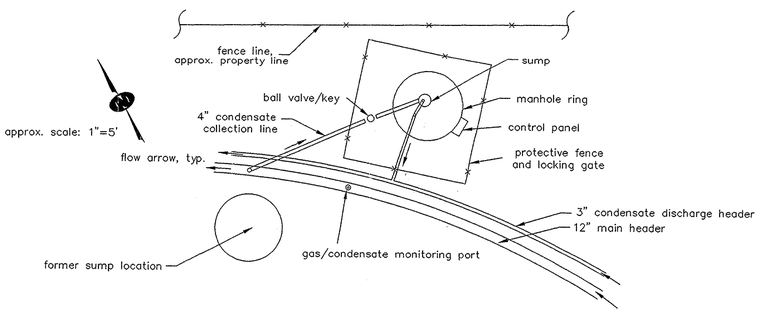

Plan View Notes:
1. Pipeline locations are approximate
2. Pipeline locations are marked with early warning tape approx. 4' above the pipe

FLANGE DETAIL

NTS

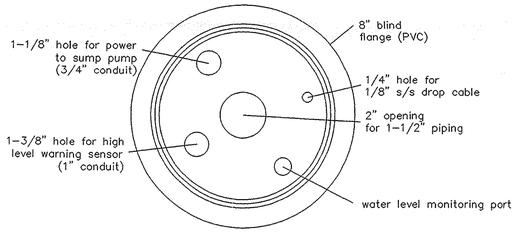

Flange Note:

Intrusions into the flange are sealed with silicone caulking or expansion bushings.

PANEL DETAIL

NTS

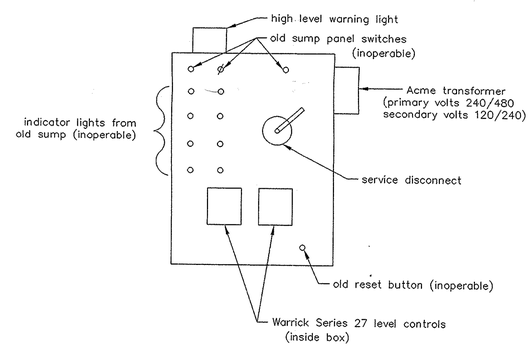

ELECTRIC SCHEMATIC DETAIL (SHOP DRAWING)

NTS

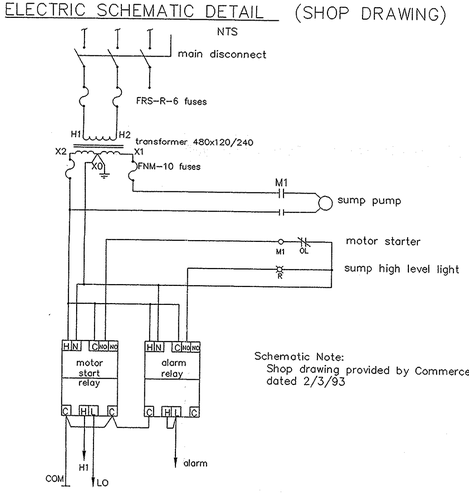

Schematic Note:
Shop drawing provided by Commerce City Electric Co., dated 2/3/93

General Notes:

1. This drawing is based on Browning Ferris Industries Gas Systems general condensate pump station design. Modifications were made to the general design in order to address existing site conditions.
2. Except where noted, all pipe and reducers consist of SDR-11 HDPE pipe.
3. The 4" saddle was fused to the 12" Main Header (Main Header "T") at the low point of the Main Header.
4. The bottom of the 4" and 6" SDR-11 pipe risers were sealed with duct tape to prevent soil intrusion during backfill operations.
5. The 1" SCH 80 PVC pipe (gas/condensate monitoring port) was offset 7' to the east of the Main Header "T" along Main Header.
6. After the top manhole rings and the re-usable sump equipment were removed, the previously existing sump was backfilled with soil.
7. The sump/pump station and electrical control panel are completely enclosed with fence and locking gate.
8. The benchmark for elevations listed was the center of the cover for S-5 (Assumed elevation = 100.00'). Elevations were established for construction purposes only.
9. To prevent freezing of condensate, interior walls and lid of concrete manhole rings and exposed condensate piping within the manhole are covered or wrapped with insulation. R values for wall and lid insulation are R-11 and R-16.8, respectively. Insulation for piping consists of pipe wrap.
10. The valve key is attached to the plastic ball valve stem with a stainless steel bolt and nut.

PIPING DETAIL, INSIDE OF MANHOLE

NTS

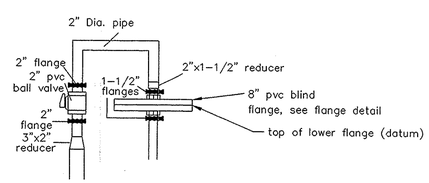

KRW CONSULTING, INC.
LAKEWOOD, COLORADO 80215

CS-2 CONDENSATE SUMP/PUMP STATION
48TH AND HOLLY LANDFILL, DENVER COLORADO
MECHANICAL DRAWING

FIGURE NO. 2

DATE	REVISIONS

DESIGNED BY: BFI/KRW	CHECKED BY: JAH
DATE: 02/93	DRAWN BY: DLH
FILE NAME: CSNEW	SCALE: NONE
PROJECT NO.: 9106-01	SHEET NO.: 2 of 4