PNL-102 TO MAIN DISCONNECT

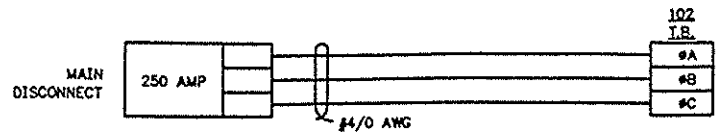

CUSTOMER CONNECTIONS TO RACK CONNECTIONS

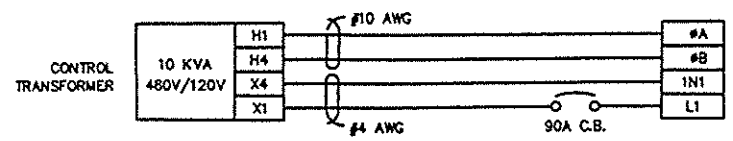

CUSTOMER CONNECTIONS TO RACK CONNECTIONS

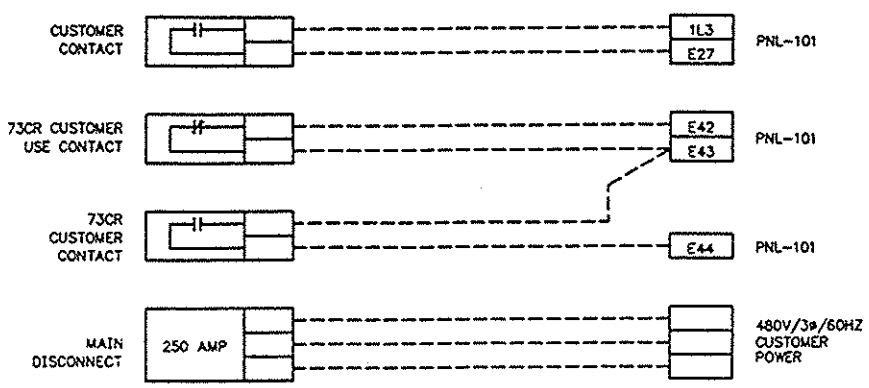

PNL-101 TO PNL-102 CONNECTIONS

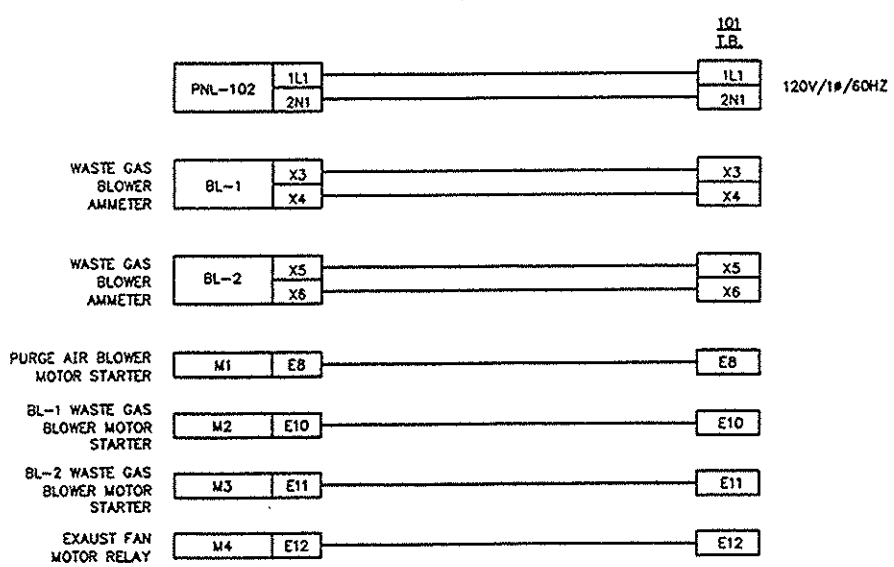

PNL-101 TO RACK CONNECTIONS

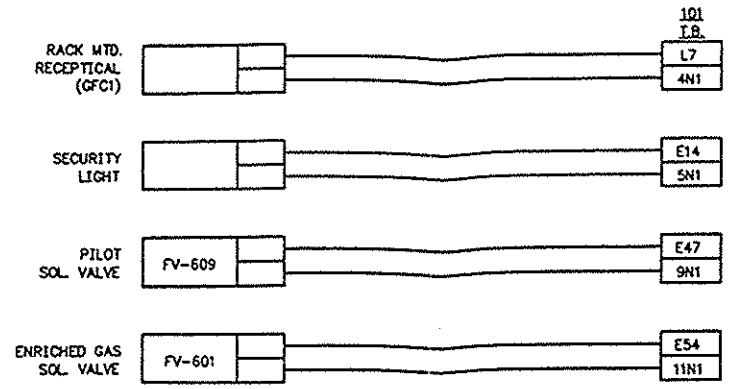

PNL-101 TO FIELD CONNECTIONS

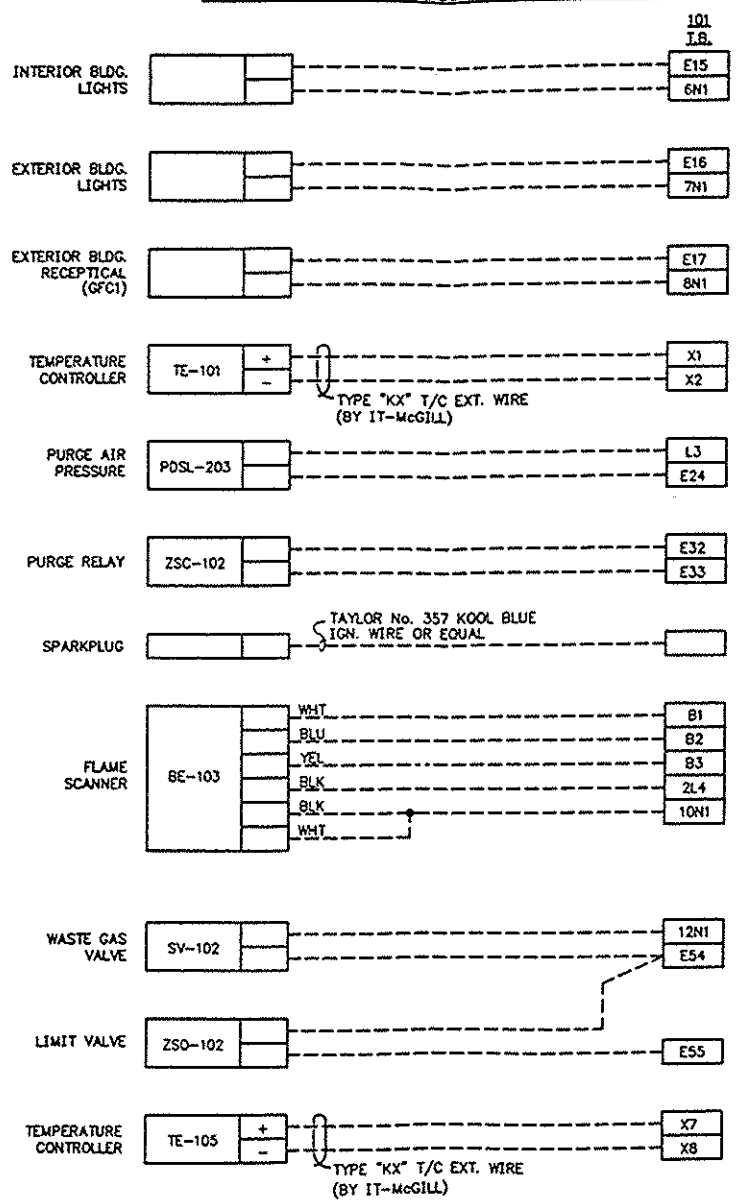

PNL-101 TO FIELD CONNECTIONS CONT.'

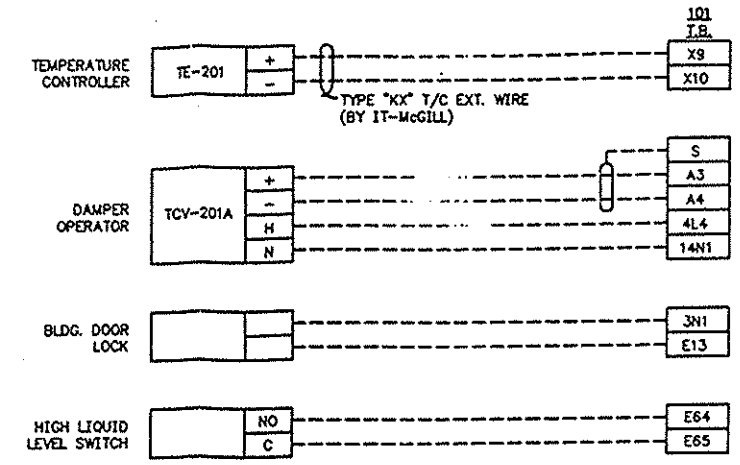

PNL-102 TO FIELD CONNECTIONS

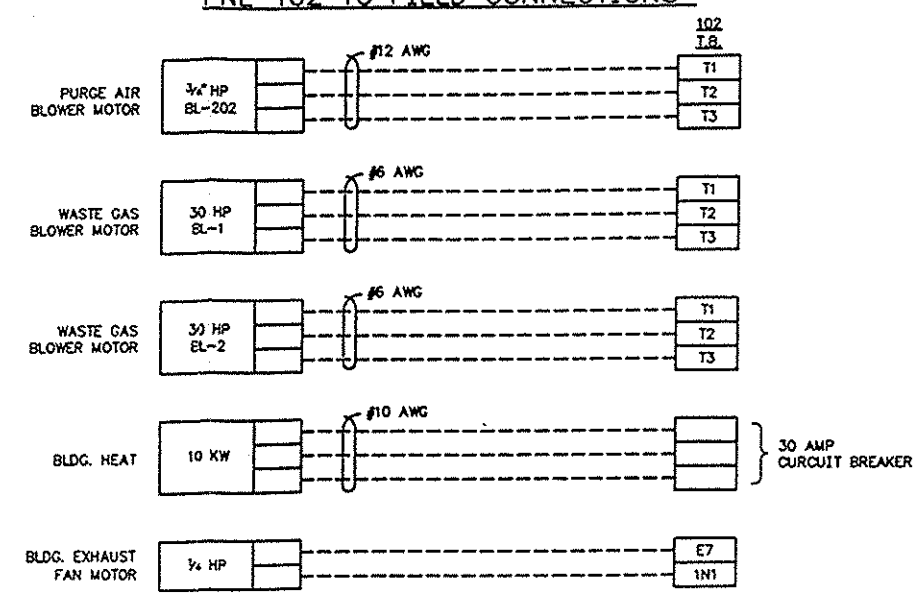

FR-105 TO FIELD CONNECTIONS

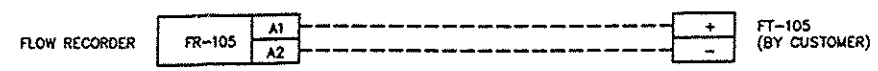

CONFIDENTIAL

REVISED

Notes :

ALL IT-McGILL SHOP WIRING TO BE AS FOLLOWS :

1) #14 AWG STRANDED OR 2/C SHIELDED CABLE UNLESS OTHERWISE NOTED.
2) RACK OR SKID WIRES TO BE ASSIGNED NUMBERS THAT CORRESPOND WITH CONTROL PANEL TERMINAL NUMBERS FROM WHICH THEY ORIGINATE UNLESS OTHERWISE NOTED.
3) ALL WIRE COLORS TO BE YELLOW UNLESS OTHERWISE NOTED.

No.	Date	By	Chk'd	App'd	Description
3	6-10-91	LKS	[illegible]	[illegible]	REVISED PER CUSTOMER REQUEST
2	5-3-91	CLARK	SC	DC	REVISED PER ECN No. 4962
1	4-1-91	CLARK	SC	JRH	ADDED FT-105 TO RACK PER ECN No. 4833

Revisions

Dwg. No.	Subject

Reference Drawings

This drawing is the property of and intended only for the private use of IT-McGILL Pollution Control Systems and may not be reproduced or given to third parties without prior written consent.

Customer: BROWNING FERRIS IND.

Drawn: MD. STUCK
Date: 5-22-91
Scale: NONE
Checked: SC
App'd: JRH

ELECTRIAL INTERCONNECT DIAGRAM

IT McGILL Pollution Control Systems
Tulsa, Oklahoma

P.O. No. 9539
Revision No. 3
Drawing No. D-120575-60-105
Sheet 1 Of 1