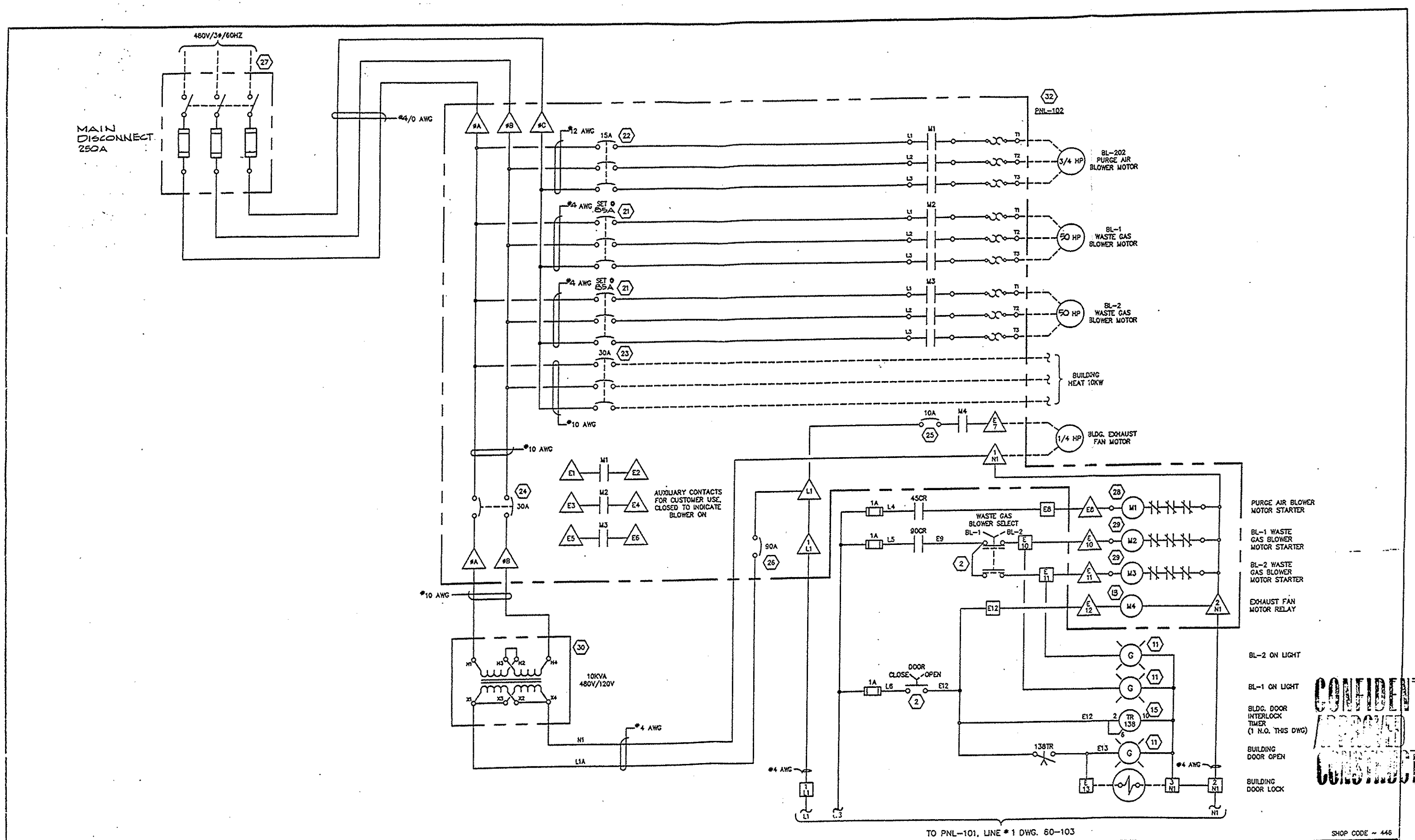

SHOP CODE ~ 446

Notes :

No.	Date	By	Chk'd	App'd	Description	Dwg. No.	Subject
						Reference Drawings	

This drawing is the property of and intended only for the private use of IT/McGill Pollution Control Systems and may not be reproduced or given to third parties without prior written consent.

Drawn FH
Date 2-28-91
Scale NONE
Checked SL
App'd JRH

Customer BROWNING FERRIS IND.

ELECTRICAL
MOTOR CONTROL SCHEMATIC

IT McGill
Pollution Control Systems
Tulsa, Oklahoma

P.O. No. 9539
Revision No. 0
Drawing No. 0-120575-60-102
Sheet 1 of 1