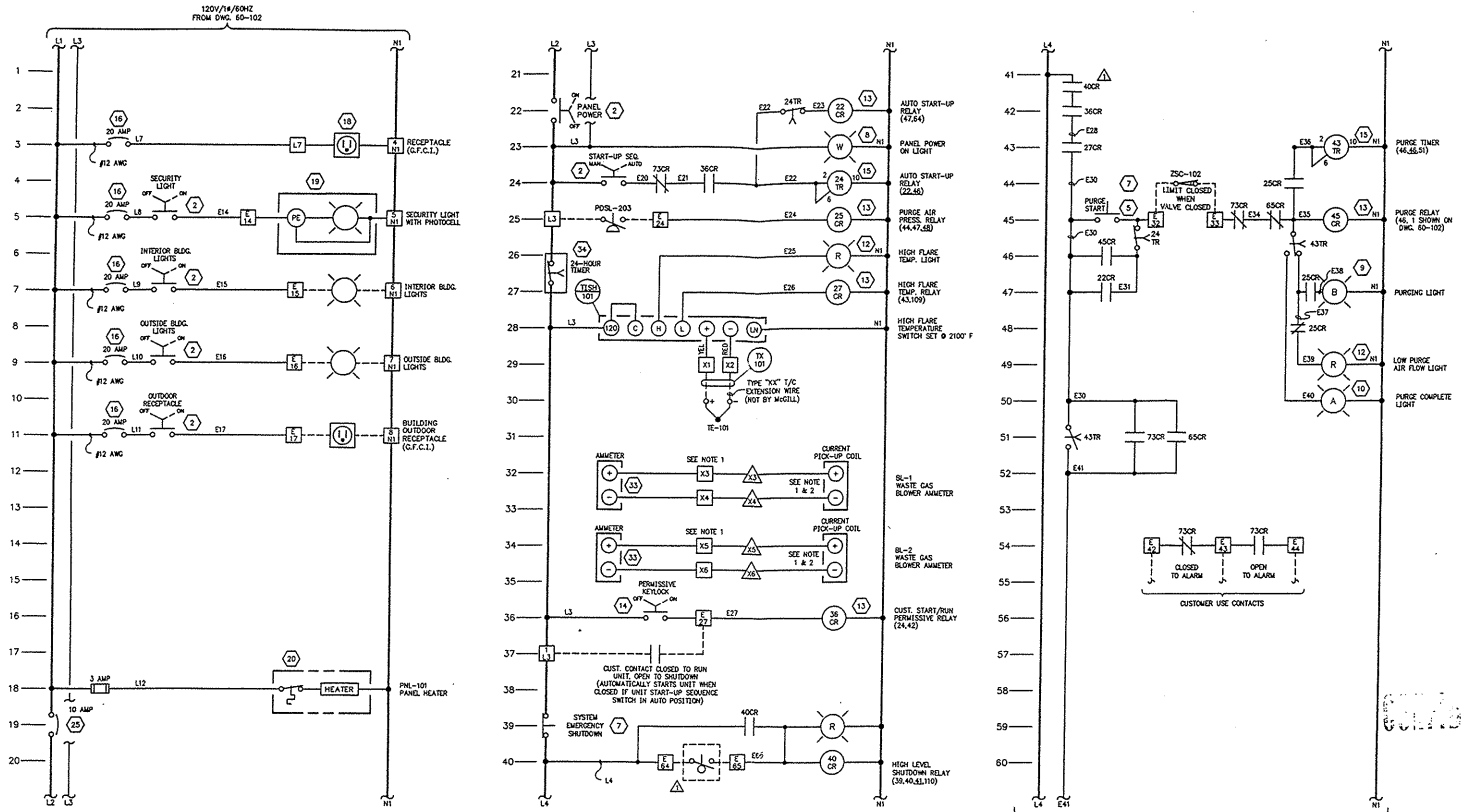

REVISED
DESTROY ALL PREVIOUS DWGS

SHOP CODE ~ 446

Notes :

1. SHOP TO LOCATE TERMINALS FOR AMP METER ADJACENT TO THERMOCOUPLE TERMINALS. USE # 12 GAUGE WIRE IN PANEL. TWIST WIRES TO AVOID VOLTAGE PICK-UP FROM A.C. WIRING.
2. SHOP TO MOUNT CURRENT PICK-UP COIL IN MOTOR STARTER ENCLOSURE.
3. SKID WIRES TO BE ASSIGNED NUMBERS THAT CORRESPOND WITH CONTROL PANEL TERMINAL NUMBERS FROM WHICH THEY ORIGINATE, UNLESS OTHERWISE NOTED.

No.	Date	By	Chk'd	App'd	Description	Dwg. No.	Subject
1	6-10-91	LKS	-	-	REVISED PER ECN 5362		

Revisions — Reference Drawings

This drawing is the property of and intended only for the private use of IT-McGILL Pollution Control Systems and may not be reproduced or given to third parties without prior written consent.

Customer: BROWNING FERRIS IND.

Drawn	GANDEE
Date	10-09-90
Scale	NONE
Checked	SC
App'd	JRH

ELECTRICAL WIRING SCHEMATIC

IT McGill — Pollution Control Systems, Tulsa, Oklahoma

P.O. No.	9539
Revision No.	1
Drawing No.	D-120575-60-103
Sheet	1 of 1