NOTE:
IF GEOLOGIC INVESTIGATION REVEALS VERY PERMEABLE STRATA SEPARATED BY DENSE IMPERMEABLE STRATA, SEPARATE MONITORING WELLS SHOULD BE INSTALLED IN EACH STRATA THAT HAS A HIGH PERMEABILITY. THE MONITOR WELL SHOULD BE FULLY SCREENED ACROSS EACH PERMEABLE STRATA.

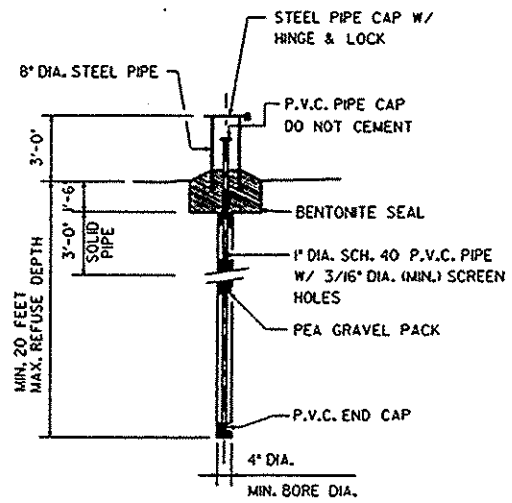

6 METHANE MONITORING WELL DETAIL

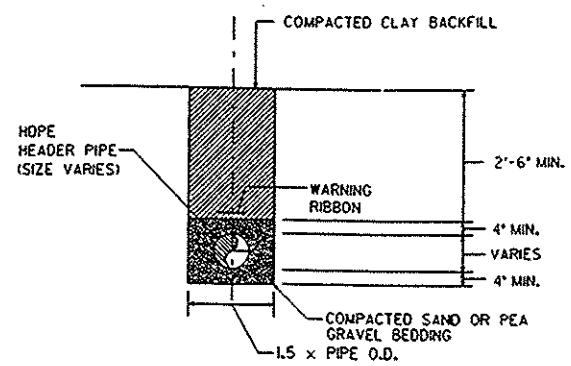

8 HEADER PIPE TRENCH DETAIL (TYPICAL FOR ALL U/G PIPE)

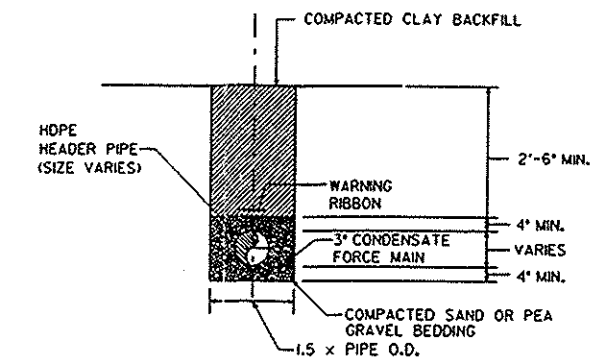

9 HEADER PIPE TRENCH DETAIL w/ CONDENSATE LINE (TYPICAL FOR ALL U/G PIPE)

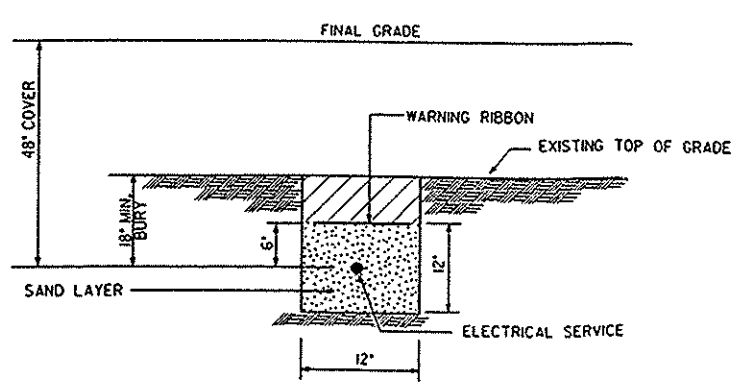

7 ELECTRICAL SERVICE TRENCH DETAIL 3-PHASE DIRECT BURY

REV	DESCRIPTION	DATE	BY

BFI
BROWNING-FERRIS INDUSTRIES
GAS SYSTEMS
757 N. ELDRIDGE - P.O.BOX 3151 - HOUSTON, TEXAS 77253 - (713) 870-8100

TITLE: MISCELLANEOUS SECTIONS AND DETAILS

PROJECT NAME AND LOCATION: GAS EXTRACTION SYSTEM, SAND CREEK LANDFILL, DENVER, COLORADO

SCALE: N.T.S.
DATE: AUG. 1991
ENGINEER: D.A.W.
DRAWN BY: A.D.W.
APPROVED BY:
PROJECT NUMBER:

DRAWING NUMBER: SHEET 10