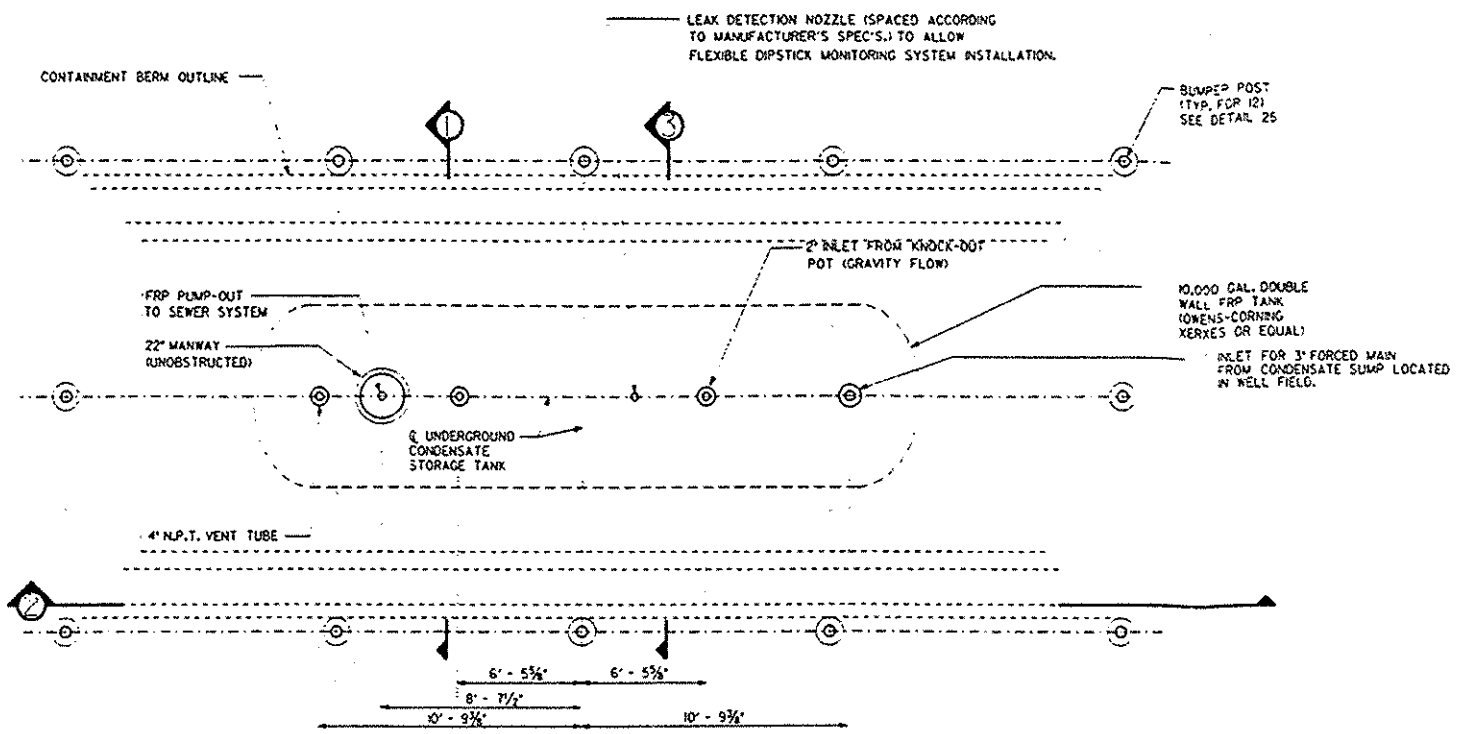

13 PLAN

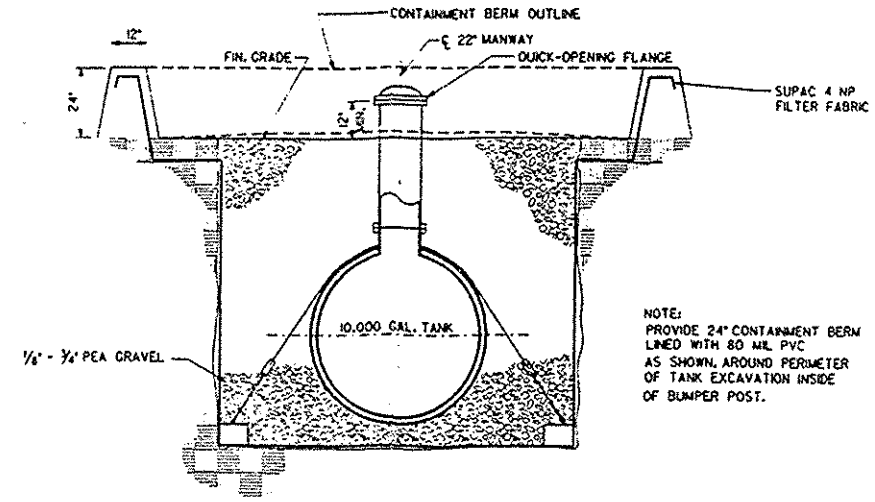

16 SECTION 1

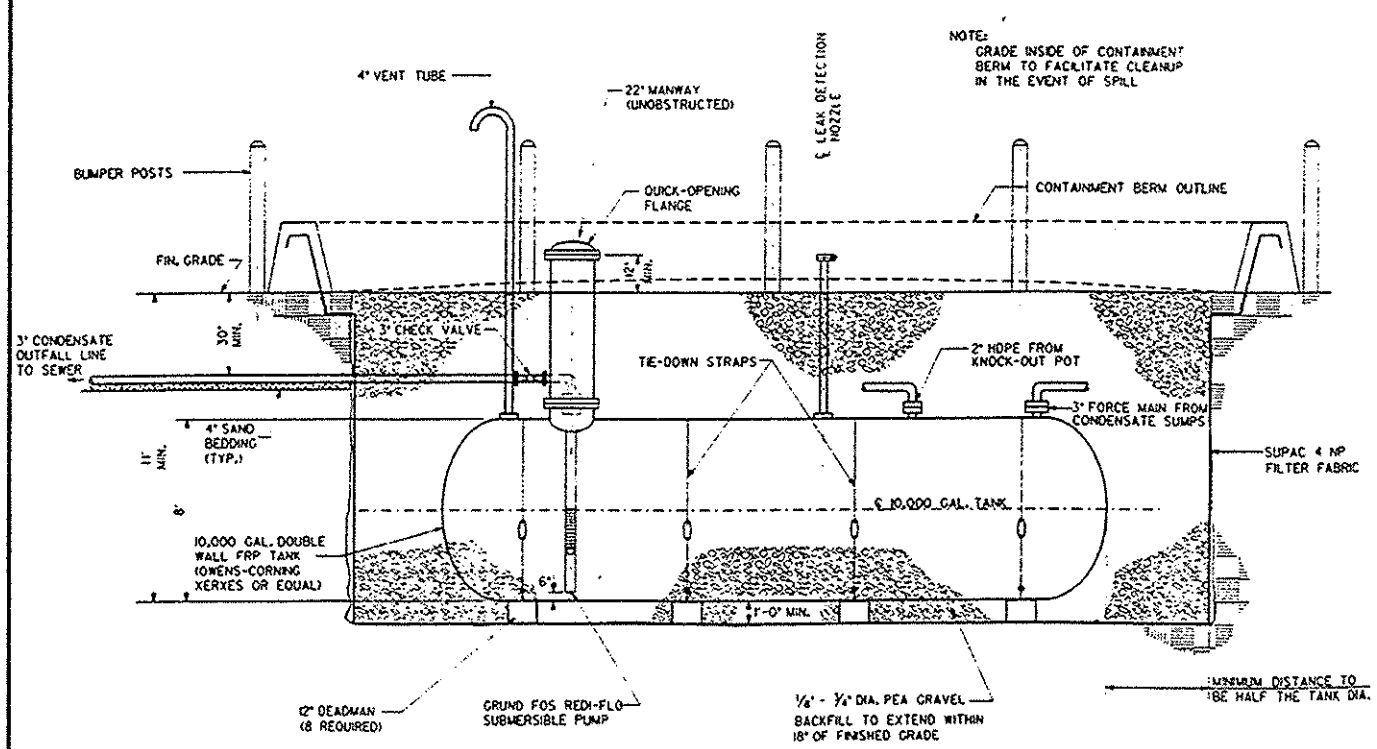

14 SECTION 2

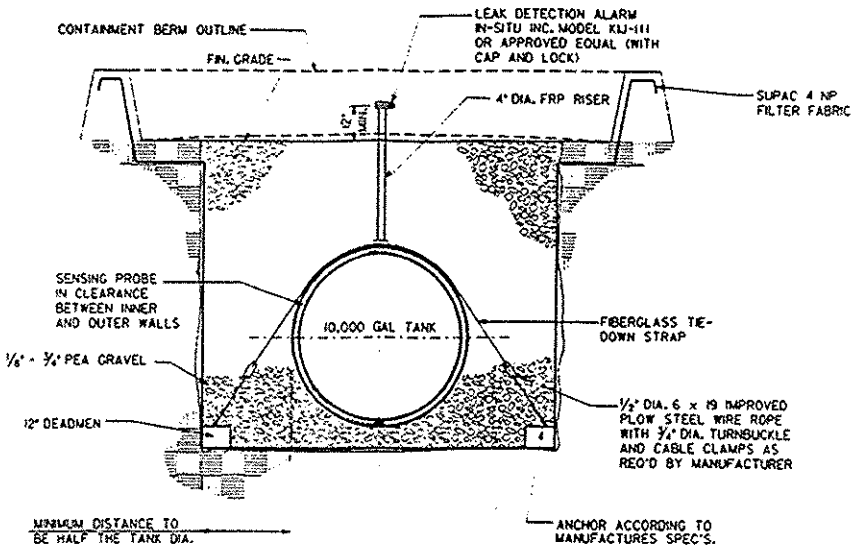

15 SECTION 3

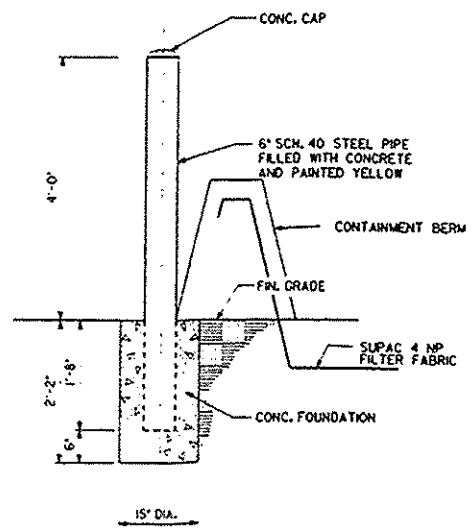

17 BUMPER POST DETAIL SECTION

REV	DESCRIPTION	DATE	BY

BFI
BROWNING-FERRIS INDUSTRIES
GAS SYSTEMS
757 N. ELDRIDGE - P.O. BOX 3151 - HOUSTON, TEXAS 77253 - (713) 870-8100

SCALE	N.T.S.
DATE	AUG. 1991
ENGINEER	D.A.W.
DRAWN BY	A.D.W.
APPROVED BY	
PROJECT NUMBER	

TITLE: TYPICAL UNDERGROUND STORAGE TANK DETAILS

PROJECT NAME AND LOCATION: GAS EXTRACTION SYSTEM
SAND CREEK LANDFILL
DENVER, COLORADO

DRAWING NUMBER

SHEET 15 OF